XL-MC100C
XL-MC100M

JVC

SERVICE MANUAL

COMPACT DISC AUTOMATIC CHANGER

XL-MC100C
XL-MC100M

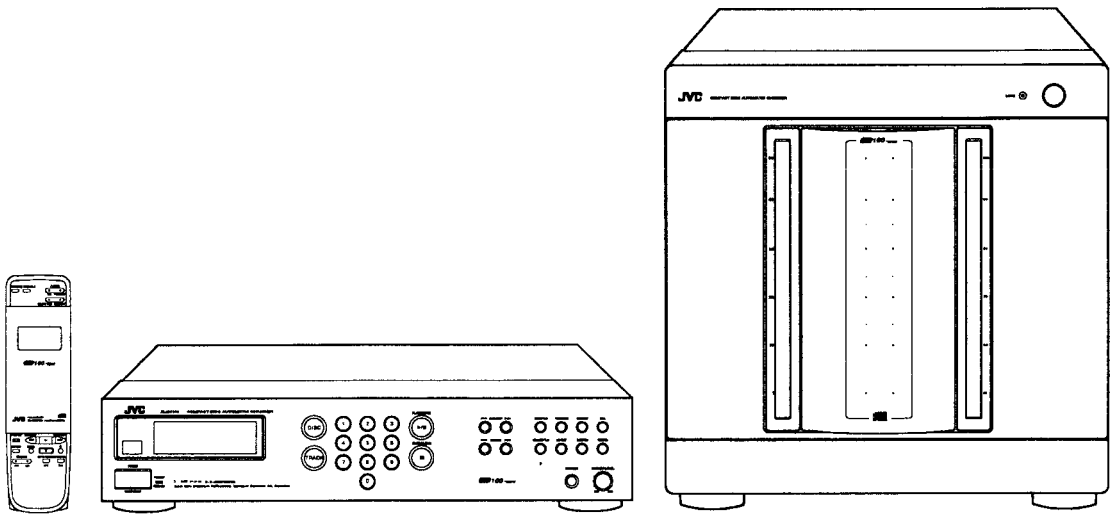

COMPACT disc DIGITAL AUDIO

100-DISC

COMPU LINK Remote Control Component

XL-MC100C
CHANGER CONTROLLER

XL-MC100M
COMPACT DISC PLAYER

Note : ＊XL−MC100M is needed when XL−MC100C servicing.
＊XL−MC100C is needed when XL−MC100M servicing.

Contents

Safety Precautions ..... 1−2
Important for Laser Products ..... 1−3
Instruction Book ..... 1−4
Description of ICs ..... 1−14
Internal Connections of FL Display Tube ..... 1−26
Disassembly Procedures(XL−MC100M) ..... 1−27
Disassembly Procedures(XL−MC100C) ..... 1−32
Adjustment Procedures ..... 1−33
Flow of Functional Operation Until TOC is read ..... 1−36
Maintenance of Laser Pickup ..... 1−37
Replacement of Laser Pickup ..... 1−37
Block Diagram ..... 1−46
Printed Circuit Board ..... 1−48
Schematic Diagram ..... 1−53
Parts List ..... 2−1

COPYRIGHT © 1994 VICTOR COMPANY OF JAPAN, LTD.

No. 20448C
Apr. 1994

Safety Precautions

1. The design of this product contains special hardware and many circuits and components specially for safety purposes. For continued protection, no changes should be made to the original design unless authorized in writing by the manufacturer. Replacement parts must be identical to those used in the original circuits. Services should be performed by qualified personnel only.
2. Alterations of the design or circuitry of the product should not be made. Any design alterations of the product should not be made. Any design alterations or additions will void the manufacturer's warranty and will further relieve the manufacture of responsibility for personal injury or property damage resulting therefrom.
3. Many electrical and mechanical parts in the products have special safety-related characteristics. These characteristics are often not evident from visual inspection nor can the protection afforded by them necessarily be obtained by using replacement components rated for higher voltage, wattage, etc. Replacement parts which have these special safety characteristics are identified in the Parts List of Service Manual. Electrical components having such features are identified by shading on the schematics and by (⚠) on the Parts List in the Service Manual. The use of a substitute repalcement which does not have the same safety characteristics as the recommended replacement parts shown in the Parts List of Service Manual may create shock, fire, or other hazards.
4. The leads in the products are routed and dressed with ties, clamps, tubings, barriers and the like to be separated from live parts, high temperature parts, moving parts and/or sharp edges for the prevention of electric shock and fire hazard. When service is required, the original lead routing and dress should be observed, and it should be confirmed that they have been returned to normal, after re-assembling.
5. Leakage currnet check (Electrical shock hazard testing)
   After re-assembling the product, always perform an isolation check on the exposed metal parts of the product (antenna terminals, knobs, metal cabinet, screw heads, headphone jack, contorl shafts, etc.) to be sure the product is safe to operate without danger of electrical shock.
   Do not use a line isolation transformer during this check.
   - Plug the AC line cord directly into the AC outlet. Using a "Leakage Current Tester", measure the leakage current from each exposed metal parts of the cabinet, particularly any exposed metal part having a return path to the chassis, to a known good earth ground. Any leakage current must not exceed 0.5mA AC (r.m.s.).
   - Alternate check method
     Plug the AC line cord directly into the AC outlet. Use an AC voltmeter having, 1,000 ohms per volt or more sensitivity in the following manner. Connect a 1,500Ω 10 W resistor paralleled by a 0.15 μF AC-type capacitor between an exposed metal part and a known good earth ground.
     Measure the AC voltage across the resistor with the AC voltmeter.
     Move the resistor connection to each exposed metal part, particularly any exposed metal part having a return path to the chassis, and meausre the AC voltage across the resistor.
     Now, reverse the plug in the AC outlet and repeat each measurement. Any voltage measured must not exceed 0.75 V AC (r.m.s.). This corresponds to 0.5 mA AC (r.m.s.).

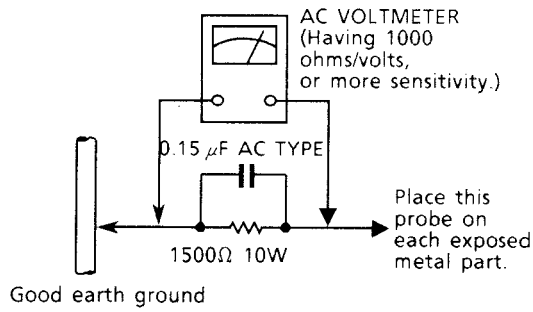

Warning

1. This equipment has been designed and manufactured to meet international safety standards.
2. It is the legal responsibility of the repairer to ensure that these safety standards are maintained.
3. Repairs must be made in accordance with the relevant safety standards.
4. It is essential that safety critical components are replaced by approved parts.
5. If mains voltage selector is provided, check setting for local voltage.

Important for Laser Products

1. CLASS 1 LASER PRODUCT
2. DANGER : Invisible laser radiation when open and interlock failed or defeated. Avoid direct exposure to beam.
3. CAUTION : There are no serviceable parts inside the Laser Unit. Do not disassemble the Laser Unit. Replace the complete Laser Unit if it malfunctions.
4. CAUTION : The compact disc player uses invisible laser radiation and is equipped with safety switches which prevent emission of radiation when the drawer is open and the safety interlocks have failed or are defeated. It is dangerous to defeat the safety switches.
5. CAUTION : If safety switches malfunction, the laser is able to function.
6. CAUTION : Use of controls, adjustments or performance of procedures other than those specified herein may result in hazardous radiation exposure.

VARNING : Osynlig laserstrålning när denna del är öppnad och spärren är urkopplad. Betrakta ej strålen.

VARO : Avattaessa ja suojalukitus ohitettaessa olet alttiina näkymättömälle lasersäteilylle. Älä katso säteeseen.

ADVARSEL : Usynlig laserstråling ved åbning, når sikkerhedsafbrydere er ude af funktion. Undgå udsættelse for stråling.

ADVARSEL : Usynlig laserstråling ved åpning, når sikkerhetsbryteren er avslott. unngå utsettelse for stråling.

REPRODUCTION AND POSITION OF LABELS

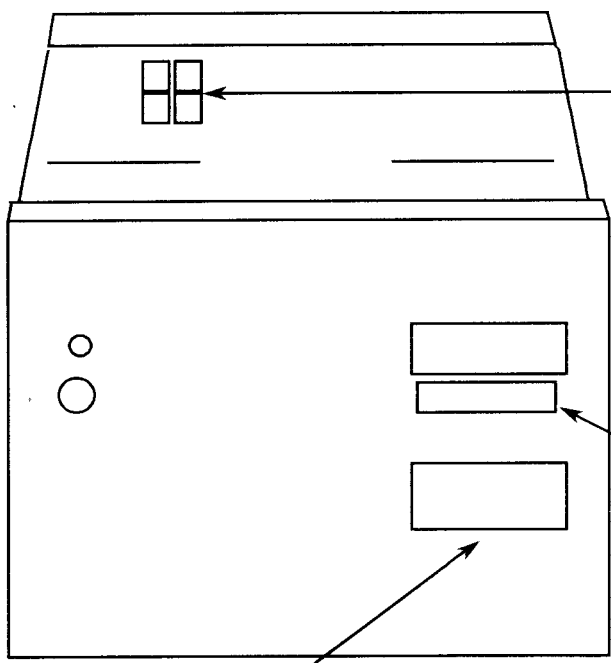

WARNING LABEL
(Except for the U. S. A.)

DANGER: invisible laser radiation when open and interlock failed or defeated. AVOID DIRECT EXPOSURE TO BEAM. (e)

VARNING: Osynling laserstråling när denna del å öppnad och spärren är urkoppled. Betrakta ej stålen. (s)

ADVARSEL: Usynling laserstråling ved åbning, når sikkerhedsafbrydere er ude at funktion. Undgåudsættelse for stråling. (d)

VARO: Avattaessa ja suojalukitus ohitettaessa olet alttiina näkymättömälle lasersäteilylle. Älä katso säteeseen. (f)

CERTIFICATION
THIS PRODUCT COMPLIES WITH DHHS RULES 21 CFR SUBCHAPTER J APPLICABLE AT DATE OF MANUFACTURE .

CERTIFICATION PRINT BY DHHS
(Only for the U.S.A.)

CLASS 1
LASER PRODUCT

CLASSIFICATION LABEL
(Except for the U. S. A. and Canada)

BEFORE USING FOR THE FIRST TIME

Installing batteries in the remote control unit

Before operating the remote control unit, install two batteries.

1. Remove the rear cover of the remote control unit.

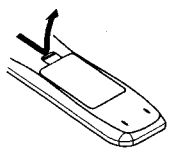

2. Install batteries. Be sure batteries are installed with correct polarity, (+) and (–).

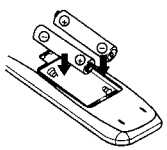

3. Attach the rear cover.

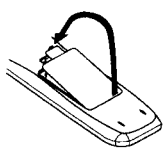

Notes

Incorrect use of batteries can cause corrosion or damage. Note the following points to lengthen battery life.

- *Install batteries observing the correct polarity, (+) and (–).*
- *Do not use new and old batteries simultaneously.*
- *Batteries with similar shapes may have different voltage ratings. Be sure to use the correct batteries.*
- *Remove batteries from the remote control unit if it will not be used for a long period of time.*

Battery replacement

Service life of batteries depends on the condition of use; standard life is about half a year. When the batteries become weak, the operating distance of the remote control unit becomes shorter and the brightness of the indicators on the remote control unit is reduced. If this happens, replace the batteries (1.5 V, R6P, size AA) with new ones.

Notes

- *The lower the temperature, the shorter the battery life.*
- *Be sure to replace the batteries within 3 minutes. Otherwise, the stored contents in disc title memory bank are erased.*

Connections

This diagram shows a typical connection.

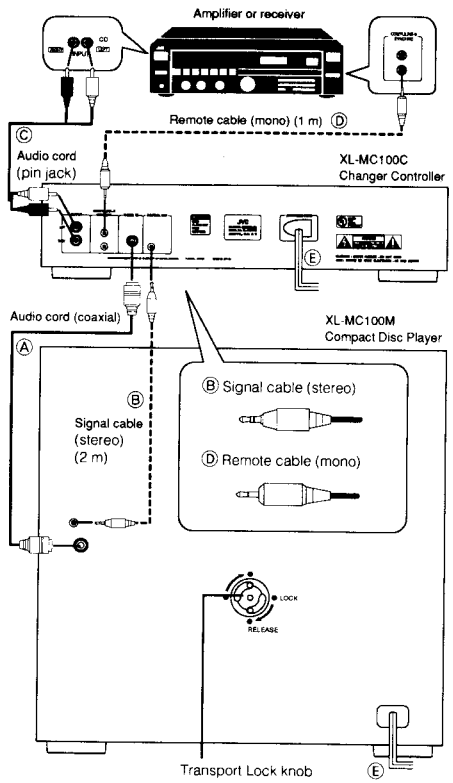

Notes on connections

- Do not connect the power plug until all connections are completed. The malfunction may result if the connections are made with the AC power cord connected to the AC outlet.
- Connect the plugs firmly. Loose connections may cause noise or malfunction.
- When connecting the signal cable (Ⓑ) and/or the remote cable (Ⓓ), note the difference of the form of the plugs (see figure above). If the connections are made by using the wrong cables, the unit may not operate correctly.

When connection is completed

Turn the Transport Lock knob on the rear panel of the player unit clockwise to RELEASE position. The unit is inoperative with this knob set to LOCK position.

Connections between XL-MC100C and XL-MC100M

Control signal input/output jacks for Player Unit control

Ⓐ SIGNAL IN/OUT jacks

The control signals between the control unit and the player unit are exchanged by connecting these jacks with the supplied cables. Connect the SINGNAL OUT jack of the player unit to the SIGNAL IN jack of the control unit.

Note

- Do not lay the signal cable and audio cord near the AC power cord, since it may cause the noise in CD playback.

Ⓑ CONTROL OUT/IN jacks

Connect the CONTROL OUT jack of the control unit to the CONTROL IN jack of the player unit.

Connections with other audio equipments

Audio signal output jacks

The audio signals are output from these jacks. Connecting to an amplifier or receiver allows you to listen to the sound from the speakers.

Ⓒ Analog OUTPUT jacks

Connect the OUTPUT jacks of this unit to the CD jacks of an amplifier or receiver with the supplied audio cable.

Notes

- *Never connect the OUTPUT jacks to the PHONO jacks of the amplifier or receiver. This may cause damage to the components.*
- *Make sure that the same channels are connected between this unit and the amplifier or receiver: LEFT to LEFT and RIGHT to RIGHT.*

Compu Link Remote Control System

Ⓓ COMPU LINK-3 SYNCHRO jacks

COMPU LINK
Remote
Control System

These jacks are used to output and input the control signal for the compu link remote control system. Connecting JVC audio components with the COMPU LINK SYNCHRO jacks automatically controls relative operations between components and facilitates various operations.

Connect the COMPU LINK SYNCHRO jacks of this unit and JVC components with the supplied remote cable. Since each component has two COMPU LINK SYNCHRO jacks (there is no difference between the two jacks), you can connect two components to these jacks.

Note

- Make sure that the COMPU LINK SYNCHRO jacks of the individual components are connected with the supplied remote cables. Also, be sure to fully read the instructions for each component.

AC power supply

Ⓔ AC POWER CORD inlet

For the control unit, the AC power cord is supplied separately and must be connected to the unit. Plug the power cord into the AC POWER CORD inlet of the control unit.

Connect the AC power plug of both control and player units to an AC household electrical outlet after all connections are completed.

Note

When using the Compu Link Remote Control System version 3, do not connect the power cord to the SWITCHED AC OUTLET of an amplifier or receiver. Otherwise, the automatic power on/off function cannot be carried out.

LOCATION OF BUTTONS

Control unit

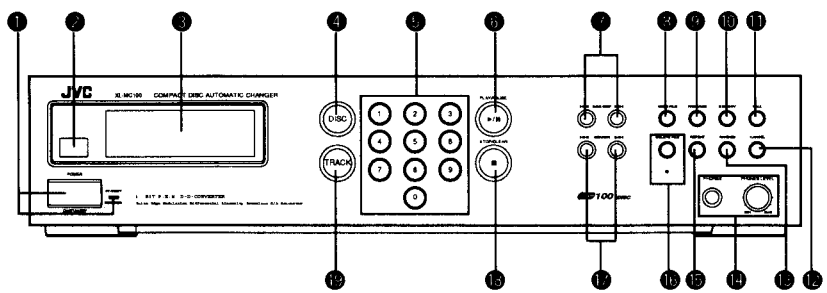

The operation for each button is described in the section indicated with the ➡ mark.

1 POWER (ON/STANDBY) switch and STANDBY/RECEIVED indicator
➡ "Turning on the power of this unit" on page 9.
To turn off the power completely, disconnect the power cord from the wall outlet.

2 REMOTE SENSOR
➡ "Remote control operation" on page 10.

3 Display window
This shows disc status information.

4 DISC button
➡ "Specifying a desired disc" on page 10.

5 Numeric buttons
These buttons are used to specify the track number, disc number or user file number.

6 PLAY ▶/II PAUSE button
➡ "Playing a disc" on page 11.

7 DISC SKIP buttons
➡ "Specifying a desired disc" on page 10.
➡ "Searching for a desired disc" on page 11.

8 USER FILE button
➡ "USER FILE" on page 16.

9 PROGRAM button
➡ "PROGRAM PLAY" on page 15.

10 MEMORY button
This button is used to memorize the disc number and/or track number in the following operation modes.
➡ "PROGRAM PLAY" on page 15.
➡ "USER FILE" on page 16.
➡ "DELETE FILE" on page 17.

11 CALL button
This button is used to display the program contents in the following operation modes.
➡ "PROGRAM PLAY" on page 15.
➡ "USER FILE" on page 16.

12 CANCEL button
Press this button to cancel the displayed contents.

13 RANDOM button
➡ "RANDOM PLAY" on page 14.

14 PHONES jack and PHONES LEVEL control
Insert the headphones plug into the jack and turn the control to adjust the volume level.

15 REPEAT button
➡ "REPEAT" on page 13.

16 DELETE FILE button and indicator
➡ "DELECT FILE" on page 17.

17 SEARCH buttons
➡ "Searching for a desired track or section" on page 11.

18 STOP ■/CLEAR button
➡ "Stopping playback" on page 11.

19 TRACK button
➡ "Specifying a desired track" on page 10.

Remote control unit

The buttons with no indication have the same functions as those of the control unit.

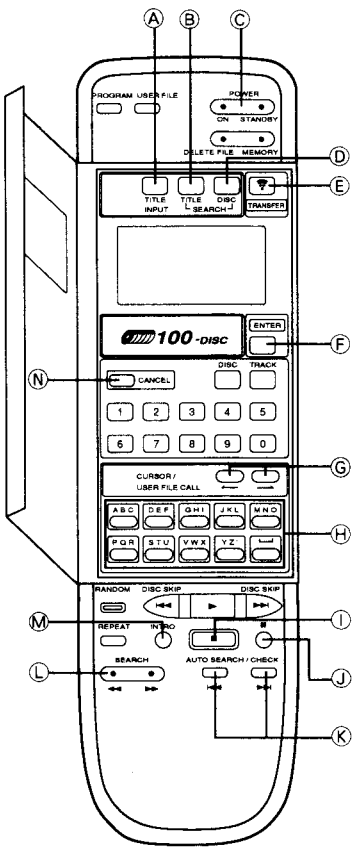

Ⓐ TITLE INPUT button
➡ "TITLE INPUT" on page 18.

Ⓑ TITLE SEARCH button
➡ "TITLE SEARCH" on page 19.

Ⓒ POWER button
➡ "Turning on the power of this unit" on page 9.
With this button, it is possible to turn on/standby both contol unit and player unit.

Ⓓ DISC SEARCH button
➡ "DISC SEARCH" on page 19.

Ⓔ TRANSFER button
This button is used to transfer the disc and/or track number specified with the remote control unit to the control unit.

Ⓕ ENTER button
After specifying the disc title or the user file title, be sure to press this button to confirm it.

Ⓖ CURSOR/USER FILE CALL buttons
These buttons are used to move the cursor position when inputting the disc or user file title with the alphabet buttons and to specify the user file number.

Ⓗ Alphabet buttons

Ⓘ ■ button
➡ "Stopping playback" on page 11.

Ⓙ II button
➡ "Playing a disc" on page 11.

Ⓚ AUTO SEARCH/CHECK buttons
These buttons are used to skip to the preceding/following track or to display the program/user file contents.

Ⓛ SEARCH button
➡ "Searching for a desired track or section" on page 11.

Ⓜ INTRO button
➡ "INTRO SCAN" on page 14.

Ⓝ CANCEL button
This button is used to erase the displayed programmed track.

Player unit

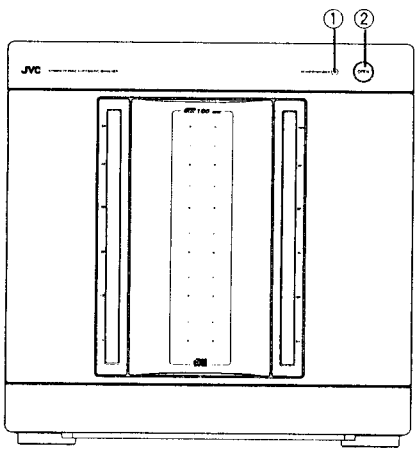

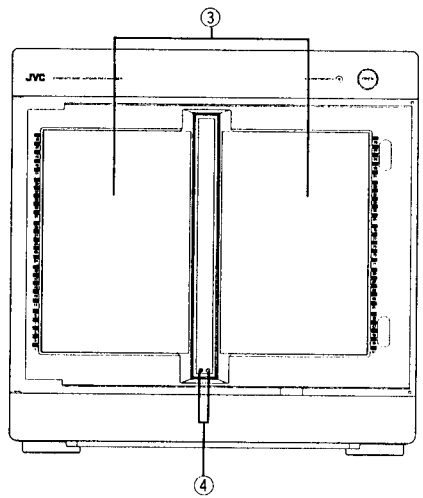

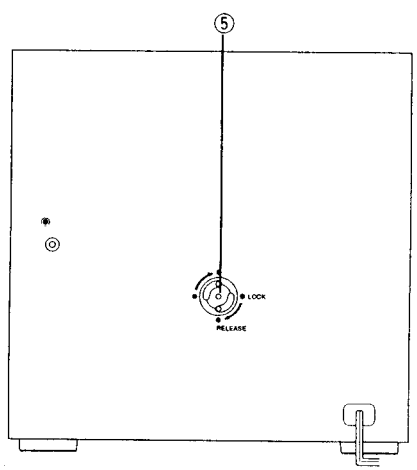

① **STANDBY/UNLOCK**
This indicator is lit when the door of the player unit is open or the unit is in standby mode.

② **OPEN button**
Press to open the front door of the player unit.
Note
When a button of the control unit or the remote control unit is pressed with the door open, "OPEN" appears in the display window of the control unit and the unit is inoperative.
Take care not to clamp your fingers while the door being closed.

③ **Disc trays**
Up to 100 compact discs can be installed.

④ **Disc position indicators**
Indicate the position of the disc specified to be played back. When a disc is specified with the control unit, the indicator moves to the specified disc position and then the disc and indicator move down to the player section. During playback, the indicator is blinking on the bottom side in the window.

⑤ **Transport lock knob**
When transporting the unit, turn this knob counterclockwise to the LOCK position to protect the inside mechanism.
- After transporting the unit, turn this knob clockwise to the RELEASE position for operating the unit.

BASIC OPERATIONS

Preliminary operations before playing a disc

Turning on the power of this unit

Press the POWER switch to turn on this unit.

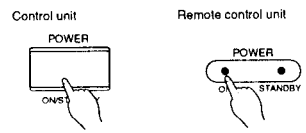

To turn the power off, press the POWER button on the control unit or the STANDBY side for the remote control unit. The unit enters the standby mode.

Note
A small amount of power (3 watts) is consumed and the STANDBY indicator is lit in the standby mode. To turn the power off completely, disconnect the power cord from the wall outlet.

Loading discs in the player unit

Up to 100 discs can be loaded in the player unit.

1. Open the front door of the player unit by pressing the OPEN button.
Never put our hand too deep inside the unit while the door is open.

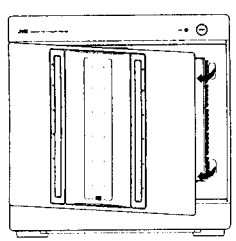

2. Slide the disc tray out.

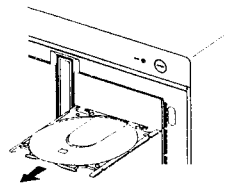

3. Place a disc on the disc tray with its label side up.
It is not possible to play a disc if it is inserted upside-down. Also, never place a disc directly in the player unit without using the disc tray.

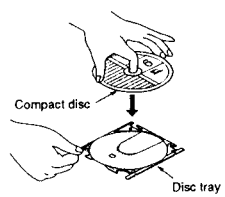

4. Line up the disc tray with the grooves in the player unit and push the disc tray in.
Be sure not to insert the disc tray skewed.

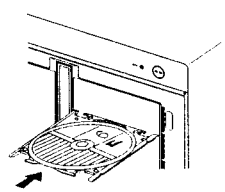

5. Close the door so that the STANDBY/UNLOCK indicator turns off.
The unit is inoperative if the door is not completely closed.
When a button of the control unit or the remote control unit is pressed with the door open, "OPEN" appears in the display window of the control unit.

When inserting and removing the disc trays, be careful with the following.

- Be sure to insert the disc trays according to the direction of the arrows marked on them. Never insert them in the opposite direction.

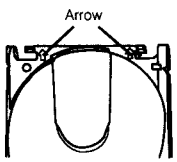

- Never bend the disc tray or force it into the player unit. A disc tray which is inserted skewed may cause a malfunction.
- The openings in the disc trays are for passage of the laser signal. These openings leave part of the shiny surface of the disc exposed. Please take care not to touch this shiny surface.
- Before proceeding to the operation of the control unit, shut the front door of the player unit completely close and confirm that the LOCK indicator is lit.

When transporting the player unit

Fix the disc trays inside the unit by turning the knob on the rear panel of the unit 90° counterclockwise to the LOCK position.

- When moving the unit after playing a disc, press the OPEN button so that the disc tray being played goes back to its original position. Close the door, and the unit can be locked for transportation.
- After the unit is set in its new location, turn the knob clockwise to RELEASE position. Playback cannot be carried out with the disc trays locked.

Remote control operation

Point the remote control unit toward the REMOTE SENSOR and operate it steadily and carefully. The remote control unit can be used within a range of about 7 meters (23 feet) from the REMOTE SENSOR, and at angles of up to about 30 degrees.

Basic functions for disc playback

Specify the desired disc number, then the track number following the procedure below.

1 Specifying a desired disc

Use the DISC button and the numeric buttons, or the DISC SKIP buttons.

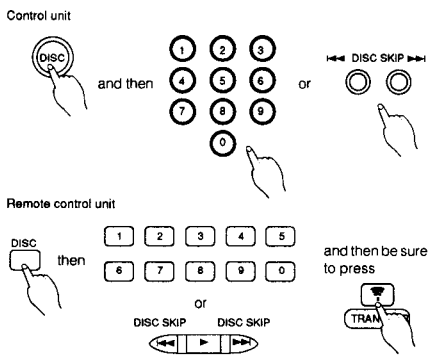

2 Specifying a desired track

To specify the desired track number, use the TRACK button and the numeric buttons, or the SEARCH buttons of the control unit or the AUTO SERACH/CHECK button of the remote control unit.

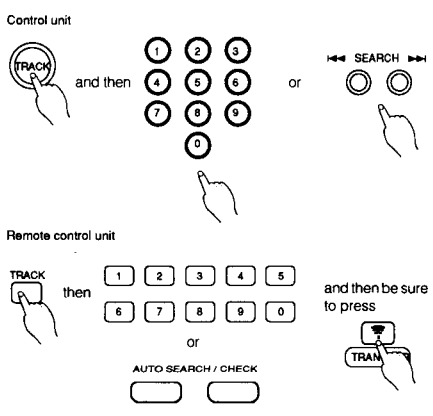

Playing a disc

Press the PLAY ▶/II PAUSE button of the control unit or ▶ button on the remote control unit.

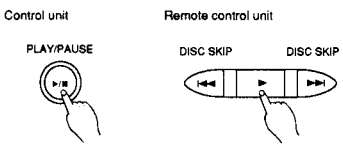

The ▶ indicator lights on the display and playback starts.

To stop playback temporarily

Press the PLAY ▶/II PAUSE button of the control unit again or II button on the remote control unit.
The II indicator lights on the display and playback stops. To resume playback, press the PLAY ▶/II PAUSE button again or ▶ button on the remote control unit.

During playback, when the ▶ button on the remote control unit or the CD button of the source selector of the amplifier/receiver which is connected to the unit through Compu Link system, the playback is resumed from the biginning of the current track in one disc mode, or from the step 1 in the program/user file mode.

Stopping playback

Press the ■ button.

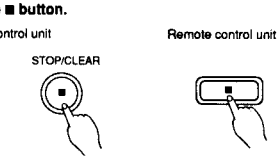

Searching for a desired disc

To skip to a desired disc during playback

Use the DISC SKIP (⏮/⏭) buttons.

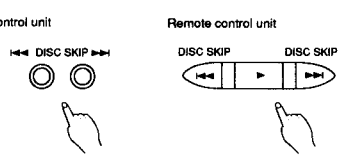

To skip back to the previous disc, tap the ⏮ button.
To skip to the next disc, tap the ⏭ button.

Searching for a desired track or section

To skip to a desired track during playback

Use the SEARCH buttons of the control unit or the AUTO SEARCH/ CHECK buttons of the remot control unit.

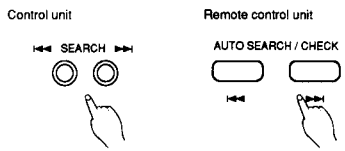

To skip back to the beginning of the track being played, tap the ⏮ button. When the beginning of the track is reached, tapping this button again skips to the previous track.
To skip to the next track, tap the ⏭ button.

Note

You can specify the track number also with the numeic buttons (See page 10). To resume playback, then press the ▶ button.

To search for a desired section during playback

Keep pressing the SEARCH buttons.

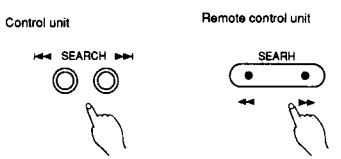

When the ⏮ or ⏭ button of the control unit or the ◀◀ or ▶▶ button of the remote control unit is kept pressed, playback advances or reverses rapidly.
While the ⏮ or ◀◀ button is kept pressed, playback rapidly reverses toward the beginning of the track. While the ⏭ or ▶▶ button is kept pressed, playback rapidly advances toward the end of the track. When the desired section is reached, release the button. The player resumes normal playback from that point.

(No.20448) 1-7

XL-MC100C
XL-MC100M

VARIOUS PLAYBACK PATTERNS

Guidance for various functions

This unit has user file/delete file functions and a disc title memory bank function in addition to various playback functions. Please read this section to familiarize yourself with this unit.

ONE DISC PLAY
You can play from any track on any disc through the final track of the disc.

REPEAT
You can play all discs, one disc, a track or entire program repeatedly.

RANDOM PLAY
The unit selects and plays tracks at random from the specified disc.

INTRO SCAN
The intro scan function allows you to check all tracks on the specified disc by playing the beginning of each track.

PROGRAM PLAY
You can play only the desired tracks among all discs in the unit in any desired order.

USER FILE
You can assign the selected discs as a group and play them continuously.

DELETE FILE
You can play tracks excluding the undesired tracks in order of track number by programming the undesired tracks.

ONE DISC PLAY

In one disc playback mode, you can play from any track on any disc through the final track of the disc.

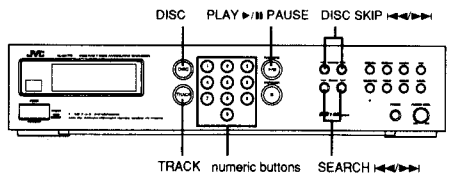

1. **When the PROGRAM or RANDOM indicator is lit instead of the ONE DISC indicator, press the corresponding button so that the present mode is cancelled and the ONE DISC indicator is lit.**

2. **Use the DISC button and the numeric buttons or the DISC SKIP ⏮/⏭ buttons to select the disc number which contains the track to be played.**
When you want to play from the first track on the selected disc, proceed to step 4.

3. **Select the track number with the TRACK button and the numeric buttons or the SEARCH ⏮/⏭ buttons.**
The selected track number appears on the display.

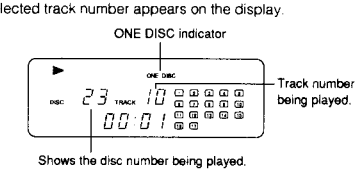

4. **Press the PLAY ►/II PAUSE button on the control unit, or the TRANSFER button and the ► button on the remote control unit to start playback.**
When the end of the disc is reached, playback stops automatically.

REPEAT

With the repeat functions, you can repeatedly play all the discs, one disc or one track.

Pressing the REPEAT button changes the REPEAT functions as follows.
→ REPEAT → REPEAT DISC → REPEAT TRACK → (OFF) →

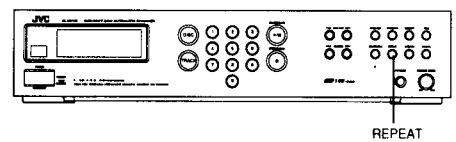

REPEAT ALL

During playback, press the REPEAT button so that only the REPEAT indicator lights on the display. This function is availeble in ONE DISC, PROGRAM and USER FILE modes.

In ONE DISC mode
Playback all the discs in the player unit continuously in order of disc numbers. The ONE DISC indicator goes out and only the REPEAT indicator lights.
If the playback comes across the empty disc tray, it is skipped and the disc in the next tray is played back. When playback of the disc 100 is finished, playback continues to disc 1.

In PROGRAM mode
Entire program is repeatedly played back.

In USER FILE mode
All the discs in the specified user file are continuously played back.

REPEAT DISC

During playback, press the REPEAT button so that the REPEAT DISC indicator lights on the display. This function is availeble in ONE DISC and USER FILE modes.

The disc being played is played repeatedly.

REPEAT TRACK

During playback, press the REPEAT button so that the REPEAT TRACK indicator lights on the display. This function is availeble in ONE DISC, PROGRAM and USER FILE modes.

The track being played is played repeatedly.

To stop repeat playback
Press the ■ button.

To cancel repeat mode
Press the REPEAT button so that the REPEAT indicator goes out.

RANDOM PLAY

In random mode, the unit selects and plays tracks at random order within the specified disc.
Selections are made so that each track is played only once.

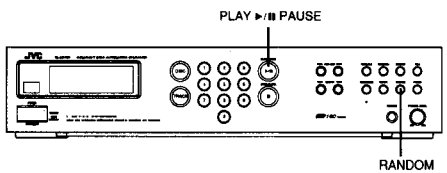

1. **In stop mode, press the RANDOM button so that the RANDOM indicator lights on the display.**

2. **Use the DISC button and the numeric buttons to select the disc to be played back.**

3. **Press the PLAY ►/II PAUSE button to start playback.**

In ONE DISC mode
After all tracks in the specified disc are played back, the unit enters stop mode.

In USER FILE mode
All the discs in the specified user file are continuously played back. Within each disc, tracks are played back at random order.

To cancel random playback
Press the ■ button.

INTRO SCAN

You can use intro scan function to search for a desired track.

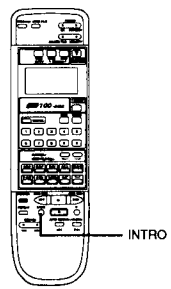

Press the INTRO button on the remote control unit so that the INTRO indicator lights on the display.

The beginning of each track on the disc is played for about 15 seconds. When all of the tracks are played back, the unit automatically goes back into stop mode.
Press the INTRO button to cancel the intro scan mode and unit enters the normal playback mode.

PROGRAM PLAY

You can program up to 32 steps in any desired order from among all the discs in the player unit.

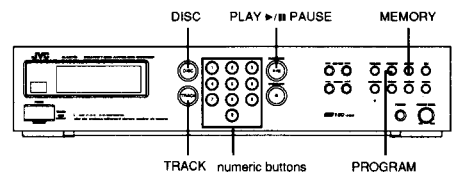

As an example, the following steps show how to program track number 12 on disc number 57 and track number 6 on disc number 34 in this order.

1. **In stop mode, press the PROGRAM button so that the PROGRAM indicator lights on the display.**

2. **Use the DISC button and the numeric buttons to select the disc which contains the track to be programmed.**
"AL" (all tracks) appears on the display.

To program the entire disc
Skip step 3 below. When the track number is not specified after selecting the disc number, all tracks on the displayed disc are programmed.

3. **Select the track number with the TRACK button and the numeric buttons.**
If you want to cancel the displayed program step, press the CANCEL button and then enter the new disc number and/or track number.

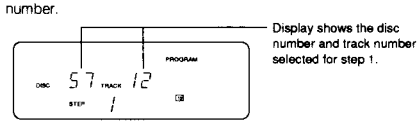

4. **Press the MEMORY button.**
The first track is programmed for step 1.

5. **Select the disc number and track number to be programmed for step 2.**
In this example, press the DISC button, 3 button and then 4 button, and then the TRACK button and 6 button. The following display appears.

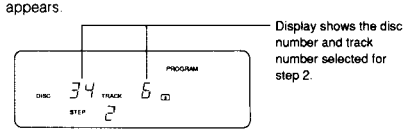

After selecting the track, press the MEMORY button.

6. **If necessary, repeat steps 2 to 4 for other tracks and/or discs to be programmed.**

7. **Start program playback with the PLAY ►/II PAUSE button on the control unit or the ► button on the remote control unit.**
The programmed tracks and/or discs are played in the programmed order.
- You can skip to a desired program step with the DISC SKIP |◄◄/ ►►| buttons.

To check the program contents
Each time the CALL button on the control unit or the CHECK ►►| button on the remote control unit is pressed, the program contents are displayed in the programmed order.
- When the unit is in program play mode, press the ■ button to enter stop mode and then operate the CALL button.

To modify the program contents
Press the CALL button until the display shows the program step to be corrected. Press the CANCEL button and then enter the new disc number and/or track number referring to steps 2, 3 and 4 above.
To add a new program step, press the call button until the display shows the program step after which the new step should be added, then enter the new disc number and/or track number.
To delete a program step, press the CALL button until the display shows the program step to be deleted and then press the CANCEL button. You can also delete a displayed program step during programming.
- When the unit is in program play mode, press the ■ button to enter stop mode and then delete the program step.

To exit program mode
Press the PROGRAM button. The program contents are not erased and whenever the program mode is selected with the PROGRAM button, you can play the tracks in the programmed order.
When the power of the unit is turned off and the unit enters STANDBY mode, the program contents are kept and, upon the power-on, unit re-enters the program mode. By pressing the ► button, program playback is resumed from step 1.

To clear the entire program
Press the STOP■/CLEAR button of the control unit in the program stop mode. The program contents will be cleared, however, the program mode is not canceled.

(No.20448) 1-9

XL-MC100C
XL-MC100M

USER FILE

You can program some of the discs in the player unit as a group and play them continuously in the programmed order. It is possible to assign 10 user files, each of which contains up to 16 discs.

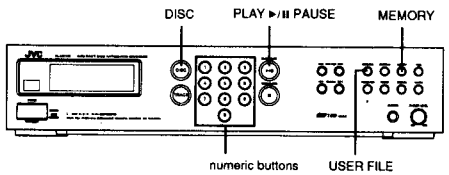

1. **In stop mode, press the USER FILE button so that the UF (User File) indicator lights on the display.**
2. **Select the user file number (1 - 10) by pressing the USER FILE button on the control unit or the USER FILE CALL buttons on the remote control unit.**
3. **Use the DISC button and the numeric buttons to select the disc to be contained in the user file.**

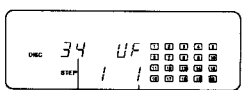

4. **Press the MEMORY button.**
5. **Repeat steps 3 and 4 for other discs to be programmed.**
6. **Start playback with the PLAY ►/II PAUSE button on the control unit or the ► button on the remote control unit.**
   The programmed discs are played in the programmed order.

To check the program contents

Press the USER FILE button of the control unit or the CURSOR/USER FILE CALL buttons of the remote control unit repeatedly so that the desired user file number appears on the display.
Each time the CALL button on the control unit or the CHECK ►►I button on the remote control unit is pressed, the program contents are displayed in the programmed order. By pressing the PLAY ►/II PAUSE button on the control unit or the ► button on the remote control unit, playback of the user file is commenced.

To modify the program contents

Press the CALL button or the CHECK ►►I button on the remote control unit until the display shows the program step to be corrected. Press the CANCEL button and then enter the new disc number referring to steps 3 and 4.
To add a new program step, press the call button until the display shows the program step after which the new step should be added, then enter the new disc number.
To delete a program step, press the CALL button or the CHECK ►►I button until the display shows the program step to be deleted and then press the CANCEL button.

To exit user file mode

Keep pressing the USER FILE button longer than 2 seconds.
Even when the power of the unit is turned off and the unit enters STANDBY mode, the user file contents are kept and, upon the power-on, unit re-enters the user file mode.

Once you made a user file

Whenever the user file mode is selected with the USER FILE button, you can play the programmed discs. You can select the desired file among 10 files by pressing the USER FILE button. By pressing the ► button, playback is resumed from the same step as before the power-off.

DELETE FILE

You can program undesired tracks and play only the remaining tracks.
This function is applicable to tracks 1 - 20 of each disc.

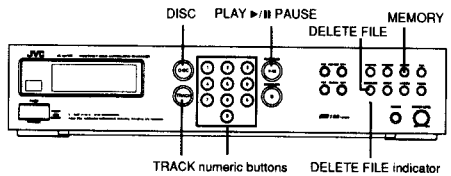

As an example, the following steps show how to delete track number 12 on disc number 57 and track number 6 on disc number 34.

1. **In stop mode, press the DELETE FILE button so that the DELETE FILE indicator lights.**
2. **Use the DISC button and numeric buttons to select the disc number which contains the track to be deleted.**
3. **Select the track number with the track buttons.**
4. **Press the MEMORY button.**

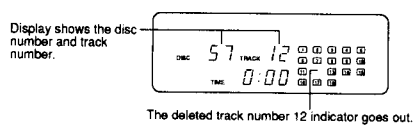

5. **Select the disc number and track number to be deleted for step 2.**
   In this example, press the DISC button, 3 button and then 4 button, and then the TRACK button and 6 button.
   After selecting the track, press the MEMORY button. The following display appears.

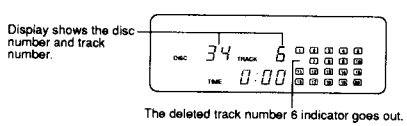

6. **If necessary, repeat steps 2 to 4 for other tracks and/or discs to be deleted.**
7. **To start delete file playback, press the PLAY ►/II PAUSE button on the control unit or the ► button on the remote control unit after specifying the desired disc and track numbers.**
   Beginning from the specifyed track, all tracks other than deleted tracks and/or discs are played in the order of the track numbers.
   - You can skip to a desired track other than deleted tracks with the SEARCH I◄◄ or ►►I button

To modify the delete file contents

Using the DISC button, the TRACK button and the numeric buttons, select the disc number and track number to be erased from the delete file and then press the CANCEL button.
- When the unit is in delete program play mode, press the STOP ■/ CLEAR button to enter stop mode and then delete the program step.

To cancel delete file mode

Press the DELETE FILE button in stop mode.

DISC TITLE MEMORY BANK

Can you remember the titles of all the discs in the unit? If you always store many discs in them, it may become difficult to find a desired disc. To solve this problem, we recommend utilizing the disc title memory bank function as your memorandum. Once the disc titles and the disc tray numbers are stored in the disc title memory bank of the remote control unit, you can easily find out which disc tray contains the desired disc. You can also assign the titles for the user files.

Guidelines for using the disc title memory bank are as follows.

- **Disc title input**
  Enter the disc tray number (1 - 100), and then enter the corresponding disc title.
- **Disc address search - When you know the disc title but not the location.**
  The disc tray number of a desired disc can be displayed by specifying one or more letters of the disc title. You can specify as many letters as required, starting from the first letter.
- **Disc title search - When you wish to check what discs exist in the player unit.**
  By specifying the disc tray number, the disc title of that tray can be displayed.

TITLE INPUT

To utilize the disc title memory bank function, it is necessary to input the disc tray number (1 - 100) and the corresponding disc title beforehand. Up to 8 characters (including digits) can be used for each disc title.

1. **Press the TITLE INPUT button.**
   The unit enters title input mode and the TITLE INPUT indicator lights on the display. To input the title for the user files, press the USER FILE button.

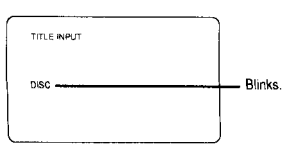

2. **Specify the disc tray number (1 - 100) with the DISC button and the numeric buttons, and then press the ENTER button. The DISC SKIP buttons can also be used to specify the disc number.**
   For user files, specify the file number (1 - 10) with the numeric buttons or the CURSOR/USER FILE CALL buttons.

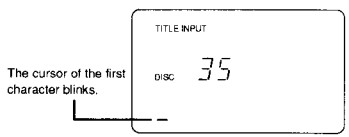

3. **Specify the disc title with the alphabet buttons and the numeric buttons. Press the ENTER button after the entry is completed.**

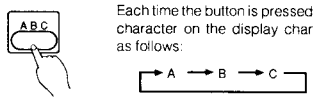

   Each time the button is pressed, the character on the display changes as follows:

   When the number is desired, press the corresponding numeric button and a space is desired, press the ␣ button.

   To correct a character, press ← or → button to move the cursor to the character to be corrected and then input the new character.

4. **To sequentially enter a disc title for the next disc tray, perform step 2 and 3.**

To play the disc which title was just stored
Press the TRANSFER button and then ► button.

To correct a disc title
Press the DISC button and the numeric buttons or the DISC SKIP buttons and the ENTER button so that the disc title to be corrected appears on the display. Move the cursor to the character to be corrected with the ← or → button and then input the new character. After correcting the disc title, be sure to press the ENTER button.

To delete a disc title
Press the DISC button and the numeric buttons or the DISC SKIP buttons and the ENTER button so that the disc title to be deleted appears on the display and press the CANCEL button. The disc title goes out. Then press the ENTER button.

To exit title input mode
Press the TITLE INPUT button again. The whole display goes out and the title input mode is cancelled.

DISC SEARCH

You can search for a disc tray number by specifying the disc title.

1. **Press the DISC SEARCH button.**
   The unit enters disc address search mode and the DISC SEARCH indicator lights on the display.

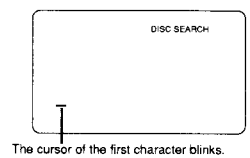

2. **Specify one or more letters of the disc title (as many letters as required, starting from the first letter) and press the ENTER button.**
   It is not necessary to input the entire disc title. The unit searches for disc titles which have the same first character starting from disc tray number 1.

3. **If the displayed title is not the one you are looking for, press the DISC SKIP button until the desired title appears in the display.**

To play the disc which disc number is displayed
Press the TRANSFER button and then ► button.

To cancel the specified character and search for new one
Press the CANCEL button and perform the steps 1 to 3 again.

To exit disc address search mode
Press the DISC SEARCH button again. The whole display goes out and disc address search mode is cancelled.

TITLE SEARCH

You can check the disc title of a certain location by specifying the disc tray number. The user file titles can also be checked with this function.

1. **Press the TITLE SEARCH button.**
   The unit enters disc title search mode and the TITLE SEARCH indicator lights on the display.
   Also, you can search for the user file title in this state by pressing the USER FILE button.

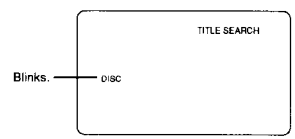

2. **Specify the disc tray number (1 - 100) with the DISC button and the numeric buttons or the DISC SKIP buttons, and then press the ENTER button.**
   The corresponding disc title is displayed.
   By pressing the DISC SKIP buttons repeatedly, the titles of the previous/following discs are displayed. To check the user file titles this way, press the USER FILE CALL buttons on the remote control unit.

To play the disc which title is displayed
Press the TRANSFER button and then ► button.

To exit disc title search mode
Press the TITLE SEARCH button again. The whole display goes out and disc title search mode is cancelled.

Compu link remote control system

The Compu Link Remote Control System controls relative operations between components automatically and facilitates various operations.

COMPU LINK
Remote
Control System

This is a system originated and developed by JVC for facilitating various system operations. There are two versions of this system; version 1 and 3. (For version 1 components, "COMPU LINK-1 SYNCHRO" is marked on the rear panel. For version 3 components, "COMPU LINK-3 SYNCHRO" is marked on the rear panel. This unit belongs to version 3.) The version 3 system controls relative functions between this unit and an amplifier or receiver, in addition to all of the functions of version 1.
The following is a brief explanation of this system:

Automatic source selection

When the remote cable provided is utilized to connect this unit to others equipped with COMPU LINK jacks, switching-in of each system component can be performed with a single touch of the source selector button located on a JVC amplifier or receiver.
When selection is carried out in this manner, the corresponding unit will automatically start operation.
Upon pressing the play button, the source selector for the amplifier or receiver changes automatically. When a new unit is switched in, the previously selected component stops operation within five seconds.

Synchronized recording

Synchronized recording refers to the process in which a JVC cassette deck starts recording, synchronized with this unit. Synchronized recording is carried out as follows:

1. Set the cassette deck to the REC/PAUSE mode in accordance with its instructions.
2. To record only certain tracks, program the tracks in any order, as desired.
3. Press the PLAY ►/II PAUSE button of this unit. The cassette deck automatically starts recording, synchronized with this unit.

Notes

- *Synchronized recording stops automatically when this unit stops playback.*
- *To cancel synchronized recording, press the stop button of this unit or the cassette deck.*
- *If the REC/PAUSE mode is set on the cassette deck by pressing the PAUSE II button after pressing the REC ● and PLAY ► buttons simultaneously, synchronized recording is not possible. For details, refer to the instructions for the cassette deck.*

Automatic power on/off function

This function is possible when this unit is connected to an amplifier or receiver of version 3.
This function is to control the power on/off of the receiver or amplifier or this unit respectively as the followings.

- When this unit enters playback mode, the power of the receiver or amplifier is turned on.
- When the source selector of the receiver or amplifier is set to CD function mode, the power of this unit is turned on.

Cautions

- *Abnormal operation will result if the power supply of the component(s) is interrupted. If this happens, you must start over again.*
- *Ensure that the COMPU LINK jacks of the individual components are connected with the provided remote cables. Also be sure to fully read the instructions for each component.*

Care of discs

How to handle CDs

When handling compact discs, do not touch the surface of the disc (reflective silver side - the side without the label).

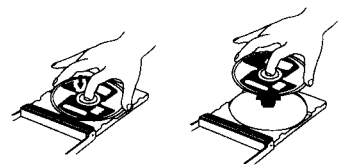

Since compact discs are made of plastic, they are easily damaged. If the disc gets dirty, dusty, scratched or warped, the sound will not be picked up correctly and, in addition, such discs may cause the CD player to malfunction.

Even on label side

Do not damage the label side, stick paper to or use any adhesive on this surface.

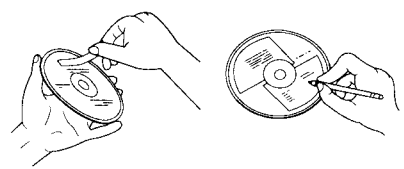

Storage

Make sure that discs are kept in their cases. If discs are piled one on top of another without their protective cases, they can be damaged. Do not put discs in any location where they can be exposed to direct sunlight - or in any place where humidity or temperature is high. Avoid leaving discs in your car!

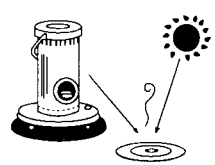

Maintenance of discs

- When there are fingerprints or other dirt adhering to a disc, wipe the disc with a soft, dry cloth with a movement going from the inside outwards.

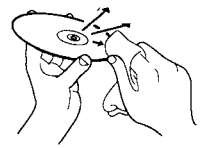

- If difficult to clean, wipe the disc with a cloth moistened with water.
- Never use record cleaners, petrol, alcohol or any anti-static agents.

TROUBLESHOOTING

What appears to be a malfunction may not always be serious. Please go through the following list before requesting service.

Symptom	Possible cause	Remedy
A track on a CD is not played.	A CD is missing.	Load a CD.
	A CD is loaded upside-down.	Load the CD with its label-side up on the disc tray or in the magazine.
	The disc tray is inserted skewed.	Insert it horizontally.
	Audio cord (coaxial) is disconnected.	Connect the plug firmly
	A CD is scratched.	Replace the disc with a new one.
	The front door of the player unit is left open.	Close the door.
	The transport lock knob is locked for transportation.	Turn the knob on the rear panel of the player unit to the RELEASE position.
	Signal cable (stereo) is disconnected.	Disconnect the AC power cords of both control unit and player unit, connect the remote cable firmly and then connect the AC power cords again.
Programming is not possible.	The program indicator does not lights.	Set to the program mode with the PROGRAM button.
	Signal cable (stereo) is disconnected.	Disconnect the AC power cords of both control unit and player unit, connect the remote cable firmly and then connect the AC power cords again.
Displayed playing time is incorrect..	When total playback time of the inserted CD is more than 80 minutes, – may be displayed instead of 8 in the second digit.	No defect.
The sound is intermittent and is harsh to the ear.	Disc is dirty.	Wipe off the disc surface with a soft cloth.
	Disc is scratched.	Replace the disc with a new one.
	Disc is warped.	Replace the disc with a new one.
	Paper or adhesive tape is stuck to the disc.	Remove it completely.
	Signal cable (stereo) and audio cord (coaxial) is too close to the AC power cord.	Remove it from the AC power cord.
Remote control unit cannot be operated.	The batteries are exhausted.	Replace the batteries with new ones.
	The front door of the player unit is left open.	Close the door.
	The remote control unit is not pointed at the remote sensor.	Point the remote control unit at the remote sensor.
	Signal cable (stereo) is disconnected.	Disconnect the AC power cords of both control unit and player unit, connect the remote cable firmly and then connect the AC power cords again.
Playback does not stop.	Signal cable (stereo) is disconnected during the playback.	See above.
Operation is not possible.	The built-in micro-computer does not function properly with static electricity or lightning storm.	Disconnect the AC power cords of both control unit and player unit, then connect them again.

SPECIFICATIONS

General

System: Compact disc digital audio system
Signal detection system: Non-contact optical detection system
CD capacity: 100 discs
Power requirement: AC 230 V ~, 50/60Hz
Power consumption: Control unit XL-MC100C 10 watts
Player unit XL-MC100M 18 watts
Dimensions (W x H x D):
Control unit 435 x 104 x 291 mm
17-1/8 x 4- 1/8 x 11-1/2 inches
Player unit 360 x 366 x 376 mm
14-3/16 x 14- 7/16 x 14-13/16 inches
Weight:
Control unit 2.9 kg
6 lbs 6 oz
Player unit 13.7 kg
30 lbs 3oz

Audio performance

Frequency response: 2 Hz to 20,000 Hz
Dynamic range: More than 98 dB at 1 kHz
Signal to noise ratio: More than 102 dB
Channel separation: More than 94 dB at 1 kHz
Total harmonic distortion: Less than 0.0025% at 1 kHz
Wow and flutter: Below the measurable limit
Analog output level: 2.0 Vrms at full scale

Accessories

Remote control unit (RM-SXMC100U) 1
Battery (R6P, AA) 2
Remote cable (1 m) 1
Signal cable (2 m) 1
Audio cord (stereo pin-plugs) (1 m) 1
Audio cord (coaxial cable) (2 m) 1
CD booklet 1
AC power cord 1

Design and specifications subject to change without notice.

POWER SPECIFICATIONS

Areas	Lien Voltage & Frequency	Power consumption
Continental Europe	AC 230 V~, 50Hz	XL-MC100C 10W
U.K	AC 240 V ~,50Hz	
Australia		
Other areas	AC 115 - 127 / 220 - 240 V~ selecttable, 50/60Hz	XL-MC100M 18W

Description of Major LSIs

■ M38173M6-265FP (IC251) : CD SYSTEM CONTROLLER

1. Terminal Layout

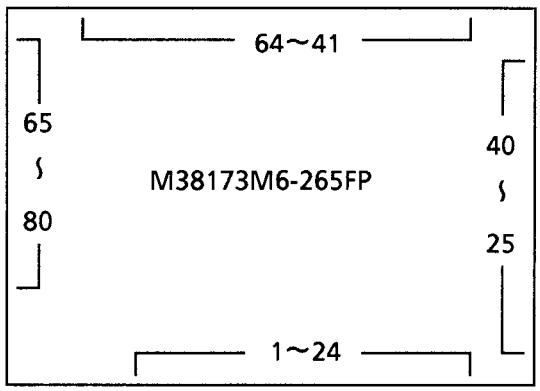

2. Pin Functions Description

Pin NO.	symbol	I/O	Function	Pin NO.	symbol	I/O	Function
1~4	D3~D0	O	Data signal	25	RMIN	I	Accepts remote control signal
5	CS	O	Chip select signal toIC252	26	POWDET	I	Power on detect
6	C/D	O	Control/Data	27	RESET	I	Reset signal input
7	W/R	O	Write /Read signal output	28	XCIN	--	Power supply
8	RD	O	Read signal output	29	XCOUNT	--	Non connect
9	ENABLE	--	Non connect	30	XIN	I	Input to 6.14MHz Xtal oscillation
10,11	SKD,SDO	--	Non connect	31	XOUT	O	Output of 6.14MHz Xtal oscillation circuit
12	SDI	--	Connect to GND	32	VSS	--	Connect to GND
13	ERROR	I	PLL LOCK error detect	33~35	NC	--	Non connect
14	POWON	O	Power on signal	36~40	K14~K10	I	Key matrix input
15	RSBDON	O	DAC mute signal	41,42	NC	--	Non connect
16	MUTE	O	Muting signal	43~53	11G~1G	O	FL grid control output
17	FTON	O	FTS indicator signal	54~64	S11~S1	O	FL segment control output
18	RMOK	O	STANDBY indicator signal	65~68	NC	--	Pull up
19	NC	--	Non connect	69~72	NC	--	Non connect
20	RXCOUT	O	Receiver clock	73	VCC	--	Power supply
21	DCSOUT	O	DCS signal output	74	VEE	I	FL power supply
22	DCSIN	I	DCS signal input	75	AVSS	--	Analog GND
23	COMST	--	Non connect	76	VREF	O	Referrence voltage output pin
24	RXRDY	I	Receiver ready	77~80	D7~D4	I	Data signal

■ M38022M4-140SP (IC201) : MECHA CONTOROL MICON

1. Terminal Layout

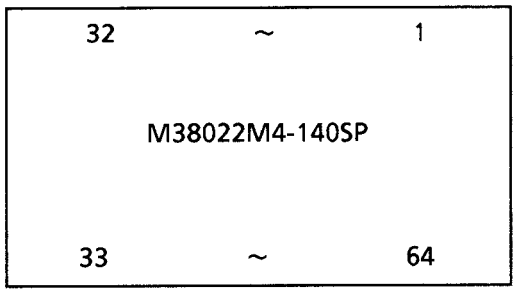

2. Terminal Functions

Pin No.	Symbol	I/O	Function	Pin No.	Symbol	I/O	Function
1	VCC	--	Power supply	33	TEST	--	Pull up
2	VREF	O	Reference voltage output pin	34	DFCT	O	"H" with focus searching
3	AVSS	--	Analog GND	35	XCX	O	"H" with tracking loop is off
4	M NO1	--	Pull up	36	P.ON	O	H : power off, L : power on
5	M NO0	--	Connect to GND	37	SDA	I/O	Data communication with IC202
6	MUTE	O	Muting signal	38	SCL	I/O	READ/WR clock communication with IC202
7	LOCK	I	Lock signal	39	D.OPEN	I	H : door open L : door close
8	FOK	I	Forcus ok signal	40	PU.R	I	Turn-table base mecha position detect L : right
9	SENS	I	Sens signal	41	PU.L	I	Turn-table base mecha position detect L : left
10	L.ON	O	Turns on laser	42	XLAT	O	Latch signal for data transmission
11	RESET	I	Reset signal	43	TY CLOSE	O	Tray close signal
12	SCOR	I	Subcord synchronizing signal	44	TY OPEN	O	Tray open signal
13	DATA	O	Serial data for signal processor	45	LOOSE	I	Door lock detect L : open
14	CLOCK	O	Clock for data transmission	46	WAIT	I	Door lock detect L : lock
15	PHL	I	Elevator position detect	47	PHH	--	Non connection
16	RESET POS.	I	Reset position detect	48	CHECK B	I	Check mode select (Pull up)
17	SQCK	O	Clock output for data transfers	49	CHECK A	I	Check mode select (Pull up)
18	NC	--	Non connect	50		--	Pull up
19	SQSO	I	Input of Q-data of subcode	51	CHECK SW	--	Switch for check mode
20	ENABLE	--	Non connection	52	DO.ACT	O	Pull up
21	DATA Y/N	--	Pull up	53	OP.LED	O	Door indicator
22	M TO C	I	Communication signal from mecha	54	EL.LED2(L)	O	Elevator LED (right)
23	C TO M	O	Communication signal to mecha	55	EL.LED1(R)	O	Elevator LED (left)
24	OPEN KEY	I	Door open key detect	56	M.FD –	O	Feed driving control signal
25	LOAD POS.	I	This pin becomes "L" when the tray loaded	57	M.FD +	O	Feed driving control signal
26	CHIP MODE	--	Pull down	58	TY. –	O	"H" with the tray opening
27	RST	O	Reset signal output	59	TY. +	O	"H" with the tray closing
28	OFF DIT	--	Connect to GND	60	TYS C	O	Tray stopper close signal
29	JAB POS.	I	This pin becomes "L" when the tray returned	61	TYS O	O	Tray stopper open signal
30	XIN	I	Performs crystal oscillation	62	GND	--	GND
31	XOUT	O	Between XI and XO	63	EL UP	O	Lifter driving control signal
32	VSS	--	GND	64	EL DN	O	Lifter driving control signal

■ CXD2500BQ(IC401) : DIGITAL SIGNAL PROCESSOR

1. Outline

The CXD2500BQ is a digital signal processsing LSI designed for use in compact disc players. It has the following functions:

- All digital signals for regeneration are processed using one chip.
- The built-in RAM enables high-integration mounting.
- Generation by the use of a digital PLL of bit clock pulses for strobing the EFM signal.
- EFM data demodulation
- Subcode demodulation and subcode Q data error detection
- Digital spindle servo system (incorporating an oversampling filter)

2.Terminal Layout

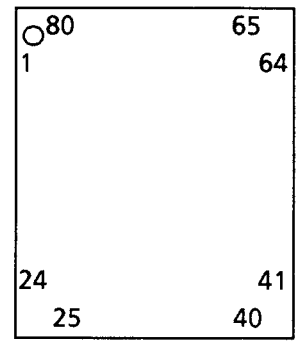

3. Block Diagram

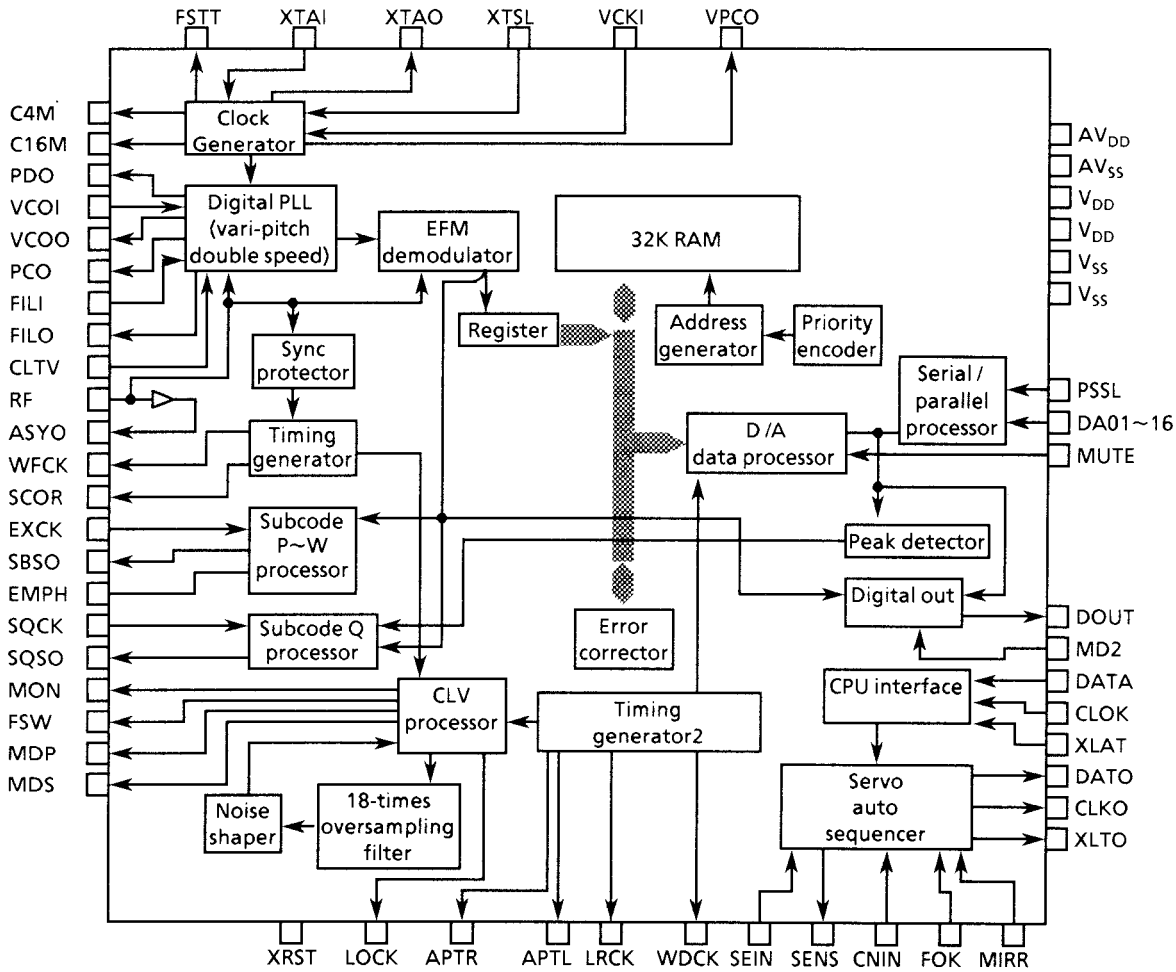

Notes:

- The data at the 64-bit slot is output in 2's complements on an LSB-first basis. The data at the 48-bit slot is output in 2's complements on an MSB-first basis.
- GTOP monitors the state of Frame Sync protection. ("H" : Sync protection window released)
- XUFG is a negative Frame Sync pulse obtained from the EFM signal before Frame Sync protection is effected.
- XPLCK is an inversion of the EFM PLL clock. The PLL is designed so that the falling edge of XPLCK coincides with a change point of the EFM signal.
- The GFS signal turns "H" upon coincidence between Frame Sync and the timing of interpolation protection.
- RFCK is a signal generated at 136-μs periods using a crystal oscillator.
- C2PO is a signal to indicate a data error.
- XRAOF is a signal issued when a jitter margin of ± 28F is exceeded by the 32K RAM.

4. Terminal Function

Pin No.	Symbol	I/O	Description
1	FOK	I	Focus OK input pin. Used for SENS output and servo auto sequencer.
2	FSW	--	Non connection
3	MON	O	Output for spindle motor ON / OFF control.
4	MDP	O	Output for spindle servo control.
5	MDS	O	Output for spindle servo control (Non connection).
6	LOCK	O	This terminal is "H" when the GFS signal sampled at 460Hz is "H". It turns "L" when the GFS signal turns out "L" 8 or more times in succession.
7~9	—	--	Non connection
10	TEST	I	Test pin (Normally at 0V)
11	PDO	O	Output of charge pump for analog EFM PLL (Non connection).
12	Vss	--	GND
13~17	—	--	Non connection
18	FILO	O	Output of filter for masterPLL (Slave = Digital PLL)
19	FILI	I	Input to filter for master PLL.
20	PCO	O	Output of charge pump for master PLL.
21	AVss	--	Analog GND
22	CLTV	I	VCO control voltage input for master PLL.
23	AV_{DD}	--	Analog power supply
24	RF	I	EFM signal input
25	TEST2	I	TEST pin (Connected to GND)
26	TEST3	I	TEST pin (Connected to GND)
27	ASYO	O	EFM full-swing output
28	TEST4	I	TEST pin (Connected to GND)
29	NC	--	Non connection
30	PSSL	I	Input used to switch the audio data output mode."L" for serial output,"H" for parallel output.
31,32	WDCK	--	Non connection
33	V_{DD}	--	Power supply
34~51	—	--	Non connection
52	VSS	--	GND
53	XTAI	I	Input to 16.9344MHz Xtal oscillation circuit or 33.8688MHz input.
54	XTAO	O	Output of 16.9344 MHz Xtal oscillation circuit.
55	XTSL	--	GND
56~58	—	--	Non connection
59	MD2	--	Pull up
60	DOUT	O	Digital-Out output pin.
61,62	—	--	Non connection
63	SCOR	O	Turns "H" when subcode Sync S0 or S1 is detected.
64	SBSO	--	Non connection
65	EXCK	--	GND
66	SQSO	O	Outputs 80-bit Sub Q and 16-bit PCM peak-level data.
67	SQCK	I	Clock input for reading SQSO.
68	MUTE	I	"H" for muting, "L" for release.
69	SENS	O	SENS output to CPU.
70	XRST	I	System reset. "L" for resetting.
71	DATA	I	Inputs serial data from CPU.
72	XLAT	I	Latches serial data input from CPU at falling edge.
73	V_{DD}	--	Power supply(+ 5V)
74	CLOK	I	Inputs serial data transfer clock from CPU.
75	SEIN	I	Inputs SENSE from SSP.
76	CNIN	I	Inputs track jump count signal.
77	DATO	O	Outputs serial data to SSP.
78	XLTO	O	Latches serial data output to SSP at falling edge.
79	CLKO	O	Outputs serial data transfer clock to SSP.
80	MIRR	I	Inputs mirror signal to be used by auto sequencer when jumping 128 or more tracks.

■ CXA1571S (IC501) : RF AMP FOR COMPACT DISC

1.Outline

The CXA1571S IC for compact disc #-point method optical pickup output has following functions.
·RF amplifier · Focus error amp · Tracking error · APC circuit

2. Block Diagram

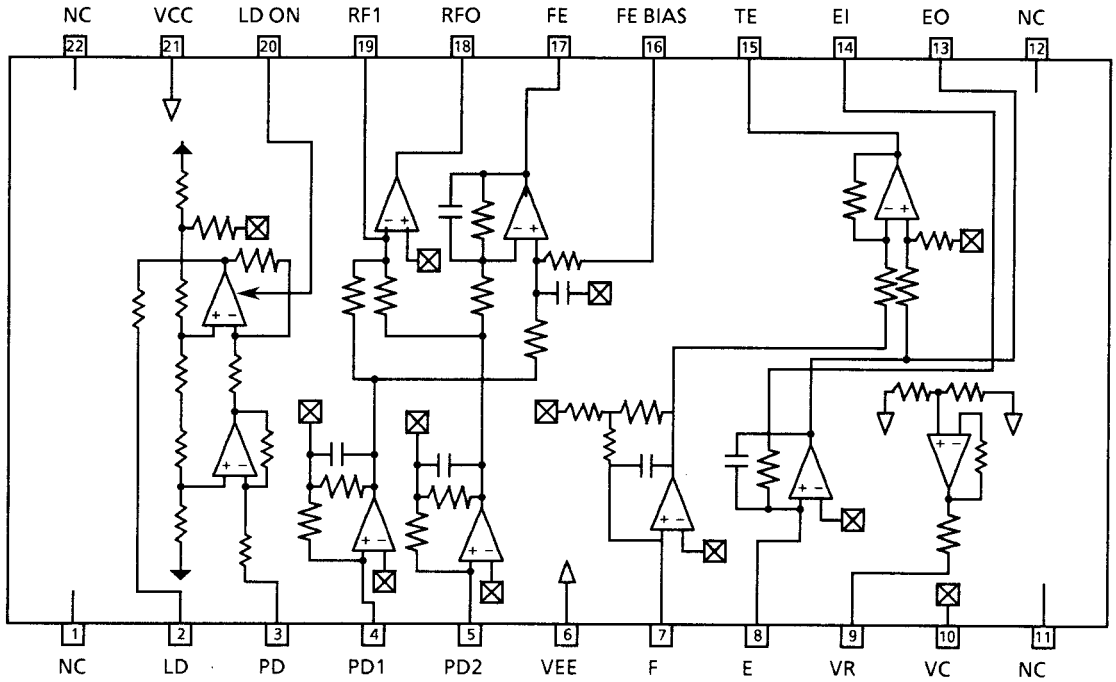

3. Terminal Function

Pin No.	Symbol	I/O	Functions
2	LD	O	APC amp output pin.
3	PD	I	APC amp input pin.
4 5	PD1 PD2	I I	RF I-V amp inverted input pins; they are connected to the A + C and B + D pins of the photodiode and receive current input.
7 8	F-IN E-IN	I I	F and E I-V amp inverted input pin; they are connected to Photodiodes F and E and receive current input.
9	VR	–	Not used.
10	VC	I	VC intermediate voltage input pin; when dual ± 5V power supplies are used, this pin is connected to GND; for a single + 5V power supply, it is connected to the VR pin.
13	EO	O	Monitor output pin for I-V amp E.
14	EI	I	Gain adjustment pin for I-V amp E.
15	TE	O	Tracking error amp output pin.
16	FE-BIAS	I	Bias adjustment pin for the mon-inverted side of the focus error amp.
17	FE	O	Focus error amp output pin.
18	RF O	O	RF amp output pin.
19	RF I	I	RF inverted side input pin; the resister connected between this pin and the RFO pin determines the gain of theRF amp.
20	LD-ON	I	This pin switches the APC amp on / off: on for VCC, off for ground.

■ CXA1372S (IC601) : RF SIGNAL PROCESSING SERVO AMPLIFIER

1.Outline

The CXA1372S is a bipolar IC developed for RF signal processing (focus OK, mirror, defect detection, EFM comparator) and servo control.

2.Functions

- Auto asymmetry control
- Focus OK detection circuit
- Mirror detection circuit
- Defects detection, counter measures circuit
- EFM comparator
- Focus servo control
- Tracking servo control
- Sled servo control

3.Terminal Layout

TE	1	48	TZC
TDFCT	2	47	DVEE
ATSC	3	46	RFO
FZC	4	45	RFI
FE	5	44	CP
FDFCT	6	43	CB
VC	7	42	DVCC
FGD	8	41	CC2
FS3	9	40	CC1
FLB	10	39	FOK
FEO	11	38	EFM
FE −	12	37	ASY
SRCH	13	36	DFCT
TGU	14	35	MIRR
TG2	15	34	DGND
AVCC	16	33	SENS
TAO	17	32	C.OUT
TA −	18	31	XRST
SL +	19	30	DATA
SLO	20	29	XLT
SL −	21	28	CLK
FSET	22	27	LOCK
ISET	23	26	DIRC
SSTOP	24	25	AVEE

4. Block Diagram

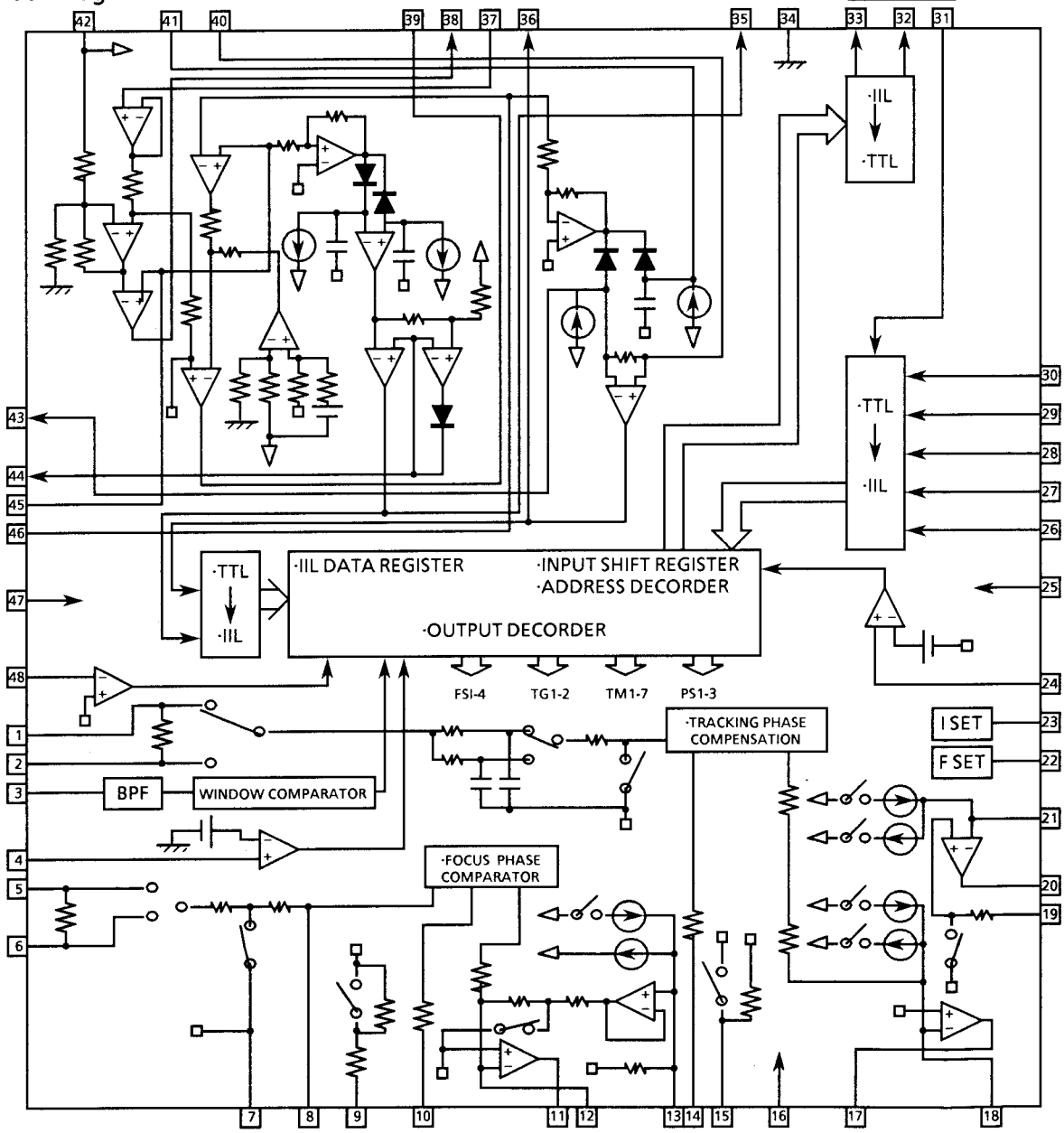

5.Terminal Functions

Pin No	Symbol	I/O	Functions
1	TE	I	Input pin of tracking error amplifier.
2	TDFCT	I	Capacitor connecting pin for time constant during defects.
3	ATSC	I	Window comparator input pin for ATSC detection.
4	FZC	I	Pin for focus zero-cross comparator input.
5	FE	I	Input pin of focus error.
6	FDFCT	I	Capacitor connecting pin for time constant during defect functions.
7	VC	I	Center voltage input pin. For dual power: GND For single power supply: (VCC + GND)/2
8	FGD	I	Connect a capacitor between this pin and pin3 to reduce high-frequency gain.
9	FS3	I	The high-frequency gain of the focus servo is switched through FS3 ON and OFF.
10	FLB	I	Time constant external pin to raise the low bandwidth of the focus servo.
11	FEO	O	Focus drive output.
12	FE-	I	Inverse input for focus amplifier.
13	SRCH	I	Time constant external pin for formation of focus search waveform.
14	TGU	I	Time constant external pin for the selection of tracking high band gain.
15	TG2	I	Time constant external pin for the selection of tracking high band gain.
16	AVCC	--	Power supply
17	TAO	O	Tracking drive output.
18	TA-	I	Inverse input pin for tracking amplifier.
19	SL +	I	Non- inverse input pin for sled amplifier.
20	SLO	O	Sled drive output.
21	SL-	I	Inverse input pin for sled amplifier.
22	F SET	I	Pin to set peak frequency of focus tracking phase compensation and fo of CLV LPF.
23	I SET	I	Current is input to determine focus search, track jump, and sled kick height.
24	S STOP	I	Limit SW ON/OFF signal detection pin for disc inner periphery detection.
25	AVEE	--	– 5V
26	DIRC	--	Not used.
27	LOCK	I	At "L" sled runaway prevention circuit operate. Contains a 47kΩpull-up resistor.
28	CLK	I	Serial data transfer clock input from CPU.
29	XLT	I	Latch input from CPU.
30	DATA	I	Serial data input from CPU.
31	XRST	I	Reset input pin, reset at "L".
32	C.OUT	O	Track number count signal output.
33	SENS	O	Outputs FZC, AS, TZC and S STOP through command from CPU.
34	DGND	--	GND
35	MIRR	O	MIRR comparator output pin.
36	DFCT	O	Output pin of DEFECT comparator.
37	ASY	I	Input pin of auto asymmetry control.
38	EFM	O	Output pin of EFM comparator.
39	FOK	O	Output pin of FOK comparator.
40	CC1	I	Output pin of DEFECT bottom hold.
41	CC2	O	Input pin for the capacitance coupled output of DEFECT bottom hold.
42	DVCC	--	– 5V
43	CB	I	Connection pin of DEFECT bottom hold capacitor.
44	CP	I	Connecting pin of MIRR hold condenser. Non-inverted input pin of MIRR comparator.
45	RFI	I	Input pin with coupling capacitor where RF summing amplifier output is connected.
46	RFO	O	Output pin of RF summing amplifier and check point of eye pattern.
47	DVEE	--	– 5V
48	TZC	I	Input pin of tracking zero-cross comparator.

■ MN35500(IC301) : D / A CONVERTER

1. Terminal Layout

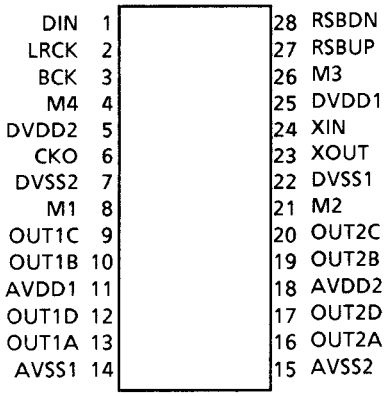

2. Block Diagram

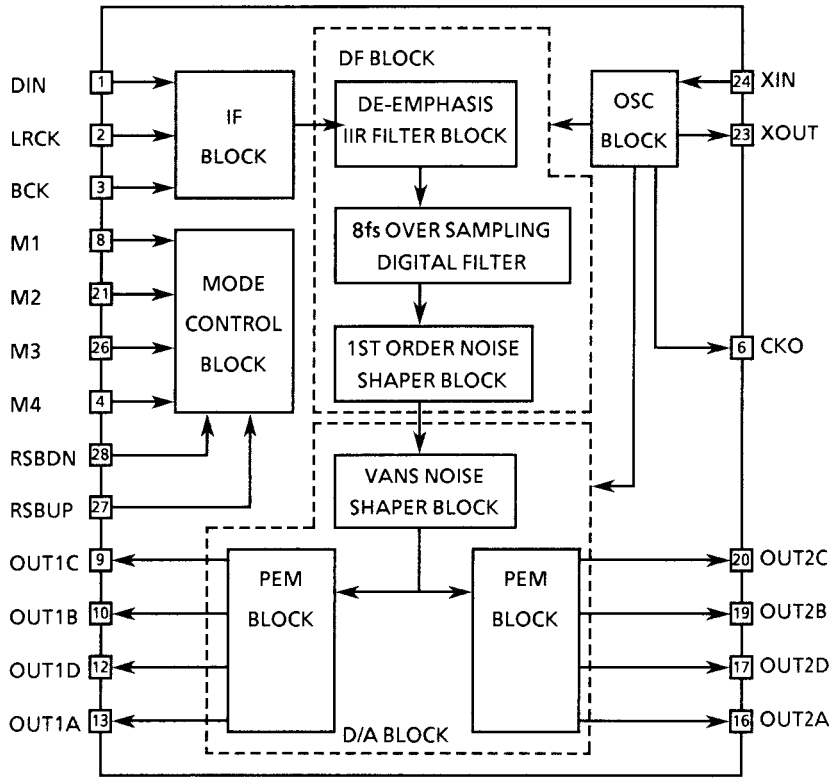

3.Terminal Functions

Pin No	Symbol	I/O	Functions	Pin No	Symbol	I/O	Functions
1	DIN	I	Data input	15	AVSS2	--	Analog ground 2
2	LRCK	I	LR clock input	16	OUT2A	O	2A PEM output
3	BCK	I	Bit clock input pin	17	OUT2D	O	2D PEM output
4	M4	--	Connect to GND	18	AVDD2	--	Analog power supply 2
5	DVDD2	--	Digital power supply 2	19	OUT2B	O	2B PEM output
6	CKO	I	Clock output	20	OUT2C	O	2C PEM output
7	DVSS2	--	Digital ground 2	21	M2	--	Connect to GND
8	M1	--	Pull up	22	DVSS1	--	Digital ground pin 1
9	OUT1C	O	1C PEM output	23	XOUT	O	Crystal oscillator output
10	OUT1B	O	1B PEM output	24	XIN	I	Crystal oscillator input
11	AVDD1	--	Analog power supply 1	25	DVDD1	--	Digital power supply 1
12	OUT1D	O	1D PEM output	26	M3	--	Connect to GND
13	OUT1A	O	1A PEM output	27	RSBUP	--	Connect to GND
14	AVSS1	--	Analog ground 1	28	RSBDN	I	Reset signal / Digital Att. control signal input

■ UPD71051GU (IC252) :

1. Terminal Layout

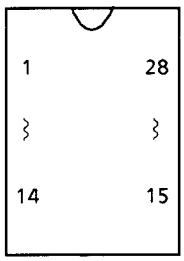

2. Terminal Functions

Pin No.	Symbol	Functions	Pin No.	Symbol	Functions
1~2	D2~D3	Data base	15 16	TXRDY SYNDET/BD	Not used
3	RXD	Receive data	17,22	CTS,DSR	Connect to GND
4	GND	GND	18	TXEMPTY	Not used
5~8	D4~D7	Data base	19	TXD	Transmit data
9	TXC	Transmitter clock	20	CLK	Clock
10	WR	Write	21	RESET	Reset
11	CS	Chip select	23,24	RTS,DTR	Not used
12	C/D	Control / Data	25	RXC	Receiver clock
13	RD	Read	26	VCC	Power supply
14	RXRDY	Receiver ready	27~28	D1~D0	Data base

3. Block Diagram

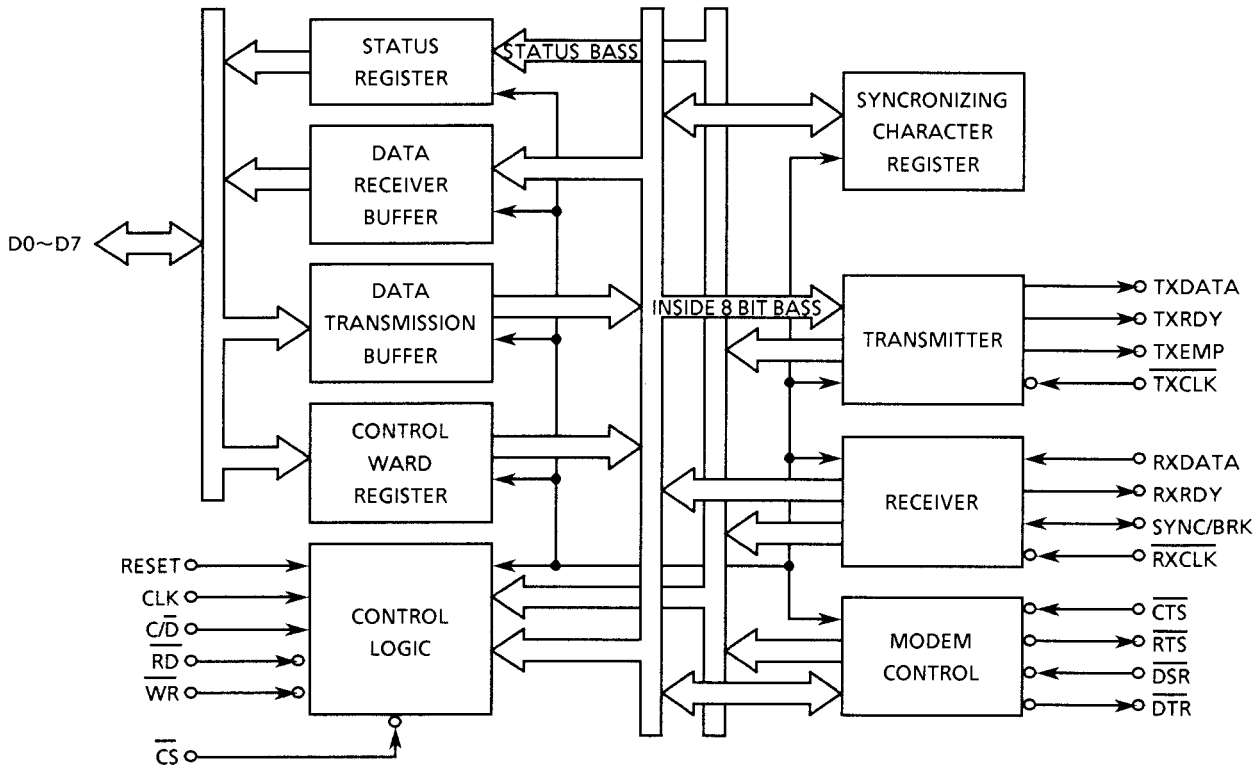

■ SN74LS05 (IC221,412) :

1. Block Diagram

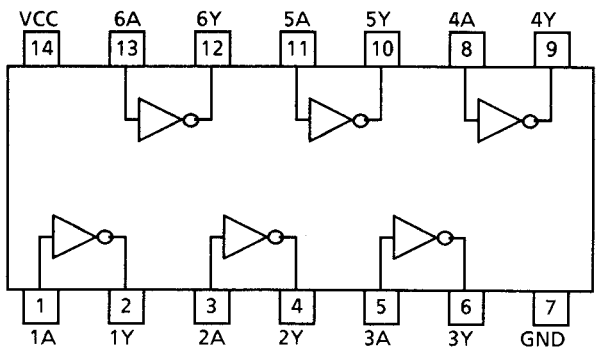

■ AT24C16 (IC202) : Serial Eeprom

1. Terminal Layout

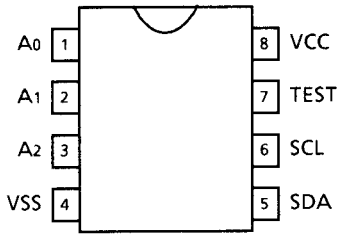

2. Terminal Functions

Pin No.	Symbol	Functions
1~3	A_0~A_2	ADDRESS INPUT (NOT USED)
4	VSS	GND
5	SDA	SERIAL DATA
6	SCL	SERIAL CLOCK
7	TEST	TEST PIN (CONNECTED TO GND)
8	VCC	POWER SUPPLY

3. Block Diagram

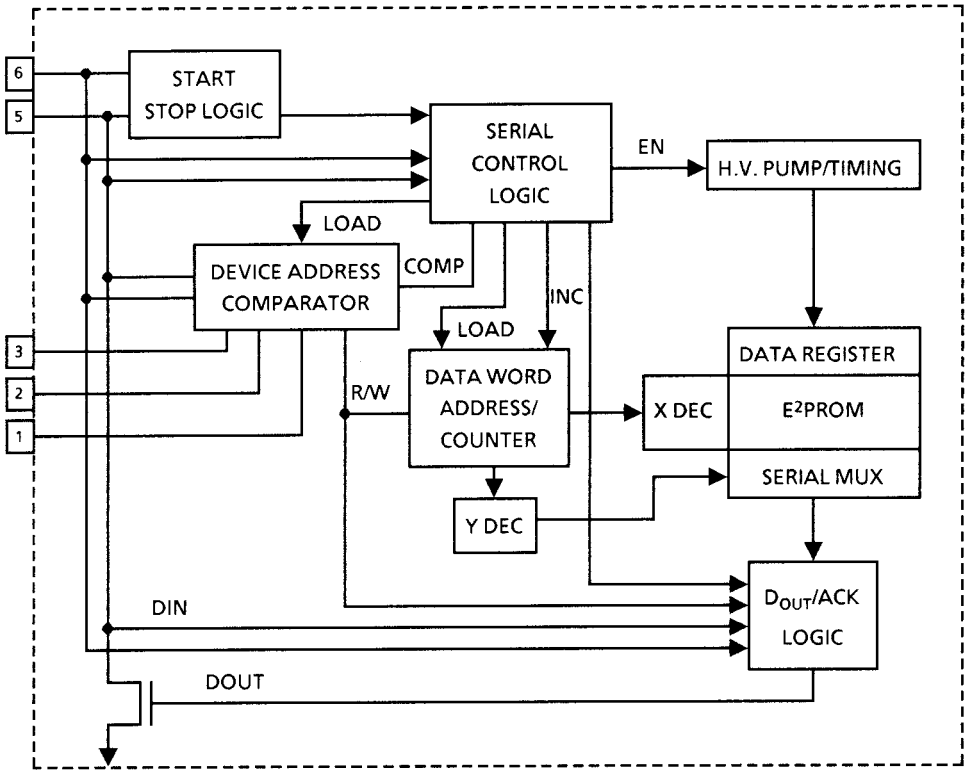

■ SN75451B (IC222,411) : Serial Eeprom

1. Terminal Layout

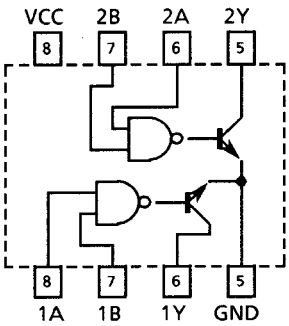

2. Terminal Function

A	B	Y
L	L	L (ON)
L	H	L (ON)
H	L	L (ON)
H	H	H (OFF)

■ TC9245N (IC302) : Digital audio interface

1. Block diagram

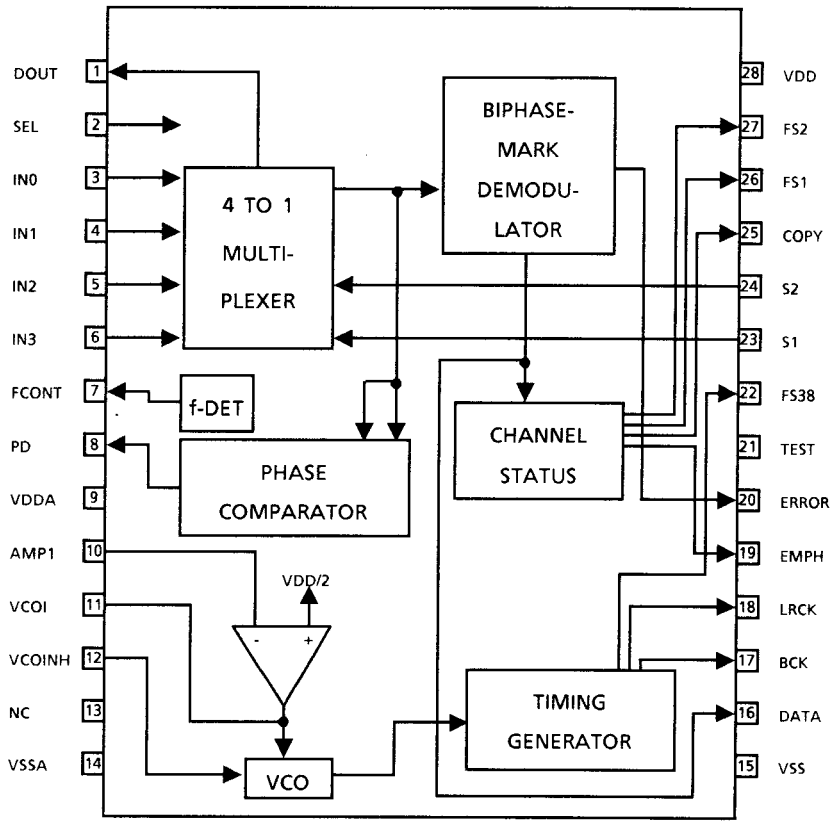

■ TC5081AP(IC303) : Phase detector for the PLL synthesizer

1. Block Diagram

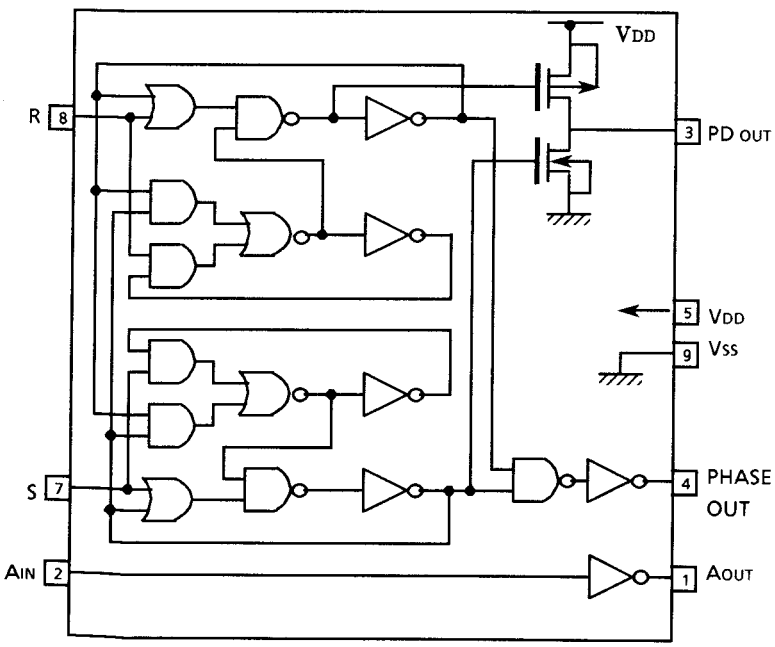

2. Pin Functions

Pin No	Function
1,2	Not used
3	Output the positive and negative pulses which are proportion to phase difference of input R,S. High impedance both phase of R and S are the same.
4	Not used
5	Power supply
6	Not used
7	Pulse input (Phase detector input)
8	Pulse input (Phase detector input)
9	GND

■ M5218AL (IC802,803,603) : Dual OP Amp.

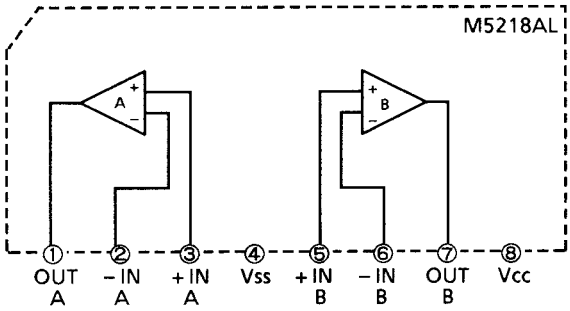

■ VC4580L (IC304,305,306,351) : Dual OP Amp.

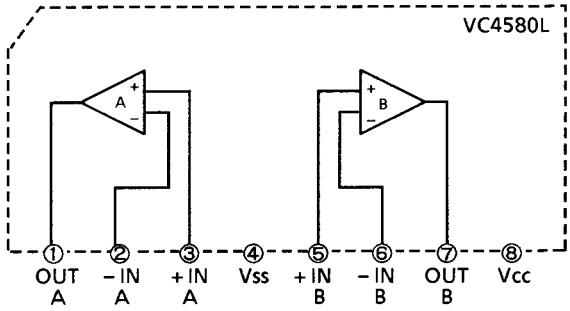

■ GP1U571X (IC256) : Receiver for remote controller

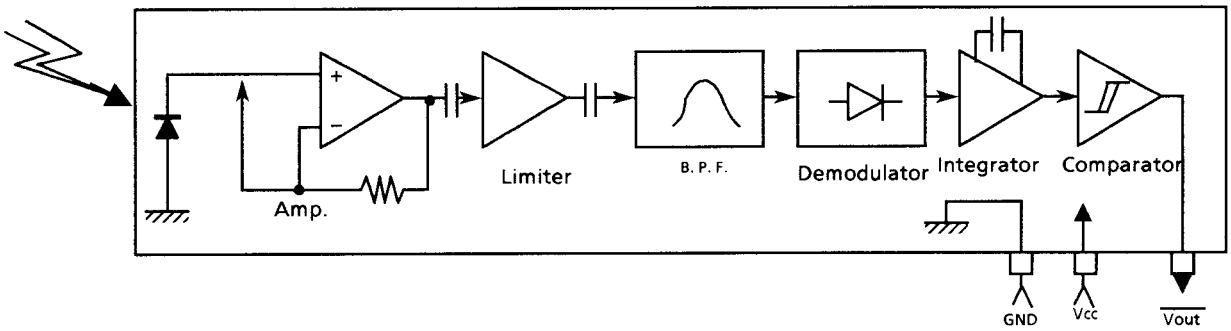

■ STA341M(A) (IC801) : Motor Driver

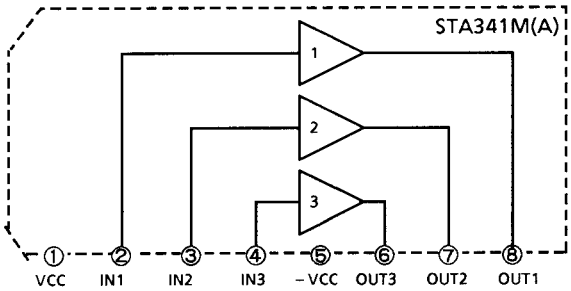

■ TC74HC125AP (IC413) : Quad Bus Buffer

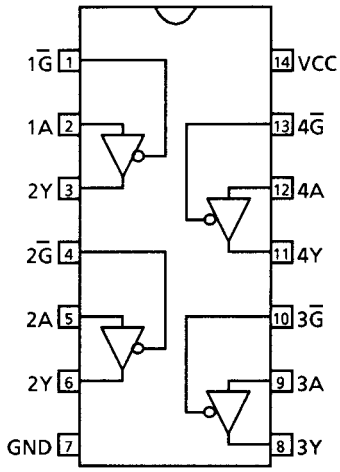

INPUTS		OUTPUTS
G	A	Y
H	X	Z
L	L	L
L	H	H

X : Dont cate
Z : High impedanse

■ MN1281(P.Q) (IC203,204,253) : Reset IC

Block Diagram

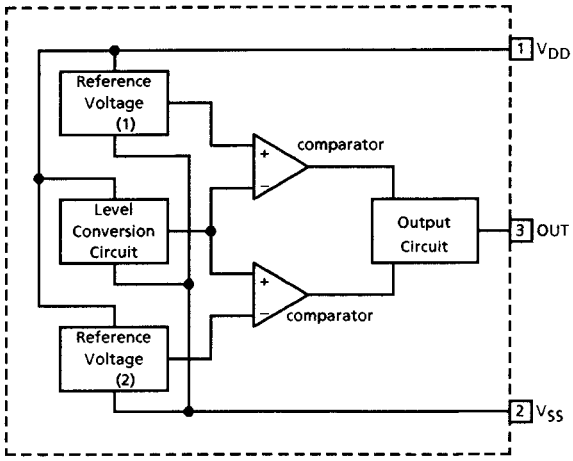

Pin No.	Pin Name	Functions
1	V_{DD}	Power supply
2	V_{SS}	Ground
3	OUT	Reset signal output : Low level is output when resetting : High level is output when cancelling the reset.

Internal Connections of FL Display Tube

■ ELU0001-162 (FL201)

1. Grid Layout

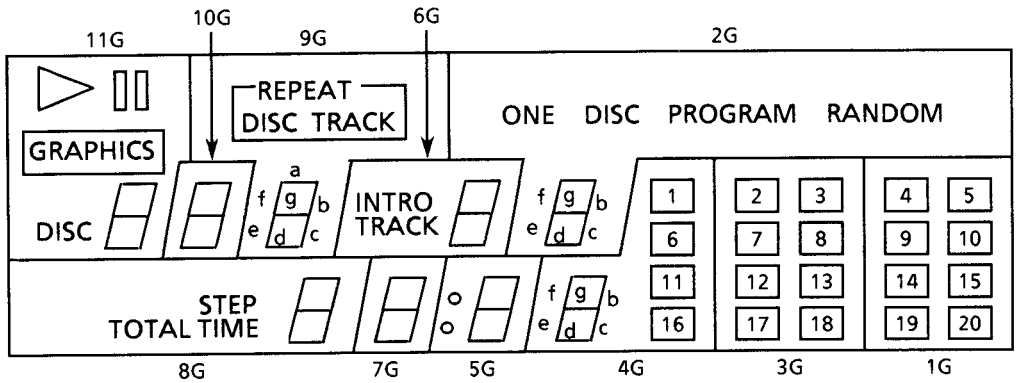

2. Pin Connection

Terminal No	1	2	3	4	5	6	7	8	9	10	11	12	13	14	15	16	17	18
ELECTRODE	F	F	F	NP	11G	10G	9G	8G	7G	6G	5G	4G	3G	2G	1G	NC	NC	P(S11)

Terminal No	19	20	21	22	23	24	25	26	27	28	29	30	31	32
ELECTRODE	P(S10)	P(S9)	P(S8)	P(S7)	P(S6)	P(S5)	P(S4)	P(S3)	P(S2)	P(S1)	NP	F	F	F

F: Filament
G: Grid
P: Anode
NP: No Pin
NC: No Connection

3. Anode Connection Table

	11G	10G	9G	8G	7G	6G	5G	4G	3G	2G	1G
S1	▷	—	REPEAT	—	—	INTRO	—	1	2	ONE	4
S2	▯▯	—	⌐¬	STEP	—	—	—	6	3	DISC	5
S3	GRAPHICS	—	DISC	TOTAL	—	—	○ ○	11	7	PROGRAM	9
S4	DISC	—	TRACK	TIME	—	TRACK	—	16	8	RANDOM	10
S5	a	a	a	a	a	a	a	a	12	a	14
S6	b	b	b	b	b	b	b	b	13	b	15
S7	f	f	f	f	f	f	f	f	17	f	19
S8	g	g	g	g	g	g	g	g	18	g	20
S9	c	c	c	c	c	c	c	c	—	c	—
S10	e	e	e	e	e	e	e	e	—	e	—
S11	d	d	d	d	d	d	d	d	—	d	—

Disassembly Procedures (XL-MC100M)

(1) Removing the Top cover

1. Remove 4 screws fastening both sides of the top cover, and 6 screws fastening the rear side.
2. Remove the top cover.

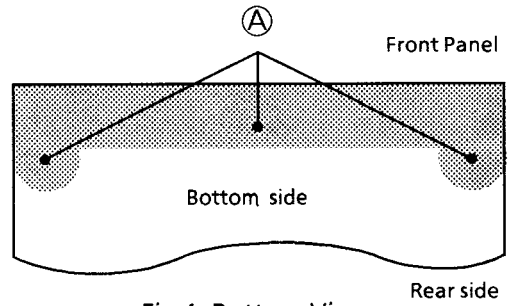

Fig 1. Bottom View

(2) Removing the Front panel Ass'y(Fig.1,Fig.2)

1. Remove the top cover.
2. Disconnect the connector P815.
3. Remove 3 screwsⒶ fastening the bottom .
4. Remove 2 fasners Ⓑ fastening the Up side.
5. Remove the front panel Ass'y.

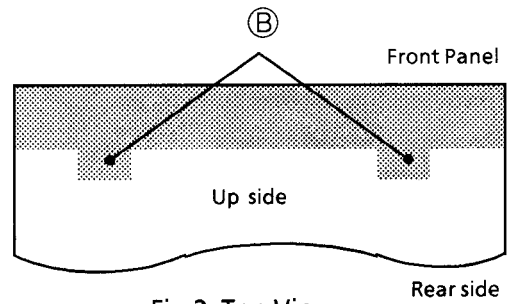

Fig 2. Top View

(3) Removing the Rear panel(Fig.3)

1. Remove the top cover.
2. Remove the screws Ⓒ and the screws Ⓓ.
3. Remove the Rear panel.

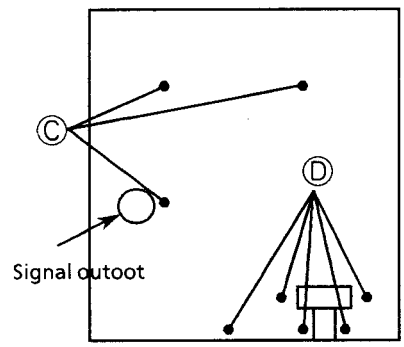

Fig 3. Rear View

(4) Removing the Bottom Base.(Fig.4)

1. Remove the top cover.
2. Remove the Rear panel.
3. Remove the front panel Ass'y.
4. Remove the the 5screws Ⓔ
5. Remove the Bottom base.

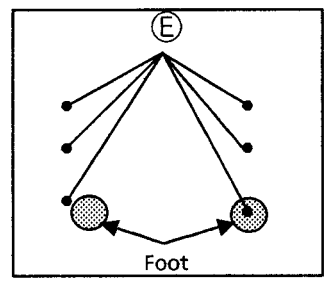

Fig 4. Bottom View

[NOTICE]
Do not set power on with the bottom cover being away.

(5) Removing the CD P.C. Board

1. Remove the top cover.
2. Remove the Rear panel.
3. Remove the 1 screw holding the OUT PUT P.C. Board.
4. Remove the connectors P601,P811 and flatwire P101,P801.
5. Remove the 4 screws Ⓕ holding the CD P.C. Board.
6. Remove the CD P.C. Board.

[NOTICE]
Do not bend P601 and P801 in case of handling.

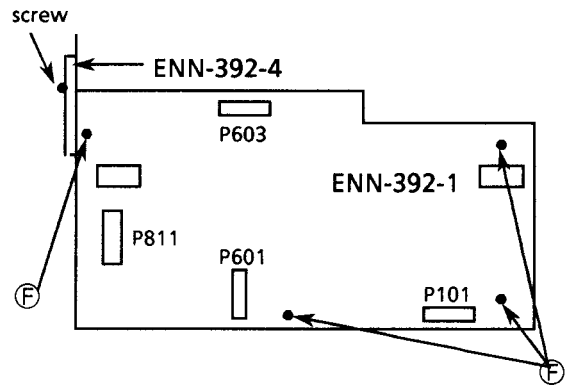

Fig 4. Rear View

(6) Removing the CD mechanism Ass'y

1. Remove the top cover.
2. Remove the rear panel .
3. Remove the CD P.C .Board.
4. Rotate the B gear shown in Fig.7,and move the loding mecha ass'y to the top.
5. Rotate the Gear A shown in Fig.5 and move the CD mechanism ass'y to right side.
6. Remove the screw Ⓖ.
7. Remove the connector P603,and flatwire P501.
8. Remove the CD mechanism ass'y.

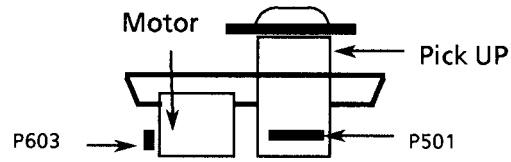

Fig 5. CD mechanism ass'y View

(7) Removing the CD mecha base Ass'y

1 Remove the top cover .
2. Remove the rear panel.
3. Remove the CD P.C .Board.
4. Rotate the B gear shown in Fig.7,and move the loding mecha ass'y to the top.
4. Rotate the A gear shown in Fig.6,and move the CD mechanism ass'y to right side.
6. Remove the screw Ⓖ.
7. Remove 2 screws Ⓗ securing the shaft of the both sides (Fig 8).
8. Remove the CD mecha base and shaft.

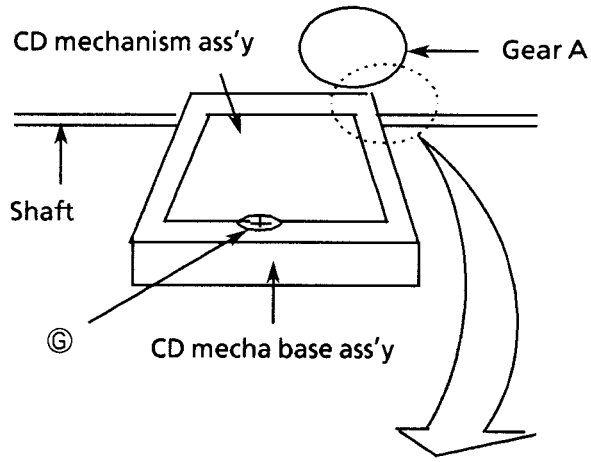

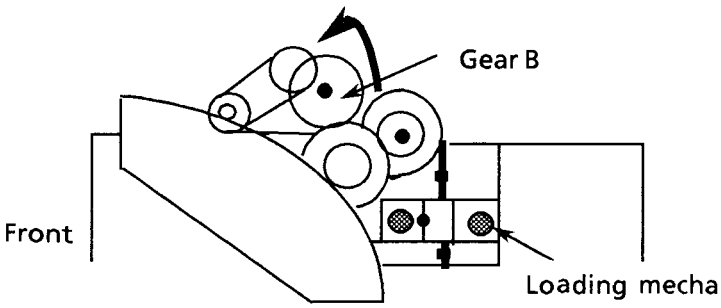

Fig 7. Elevator mecha ass'y

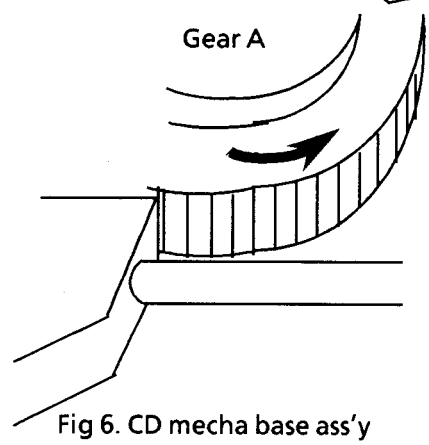

Fig 6. CD mecha base ass'y

(8) Removing the loding mecha Ass'y

1 Remove the top cover .
2. Remove the rear panel.
3. Remove the CD P.C .Board.
4. Rotate the Gear B so that the loading mecha can be set at the location shown in Fig.8 when yow look the unit from its side.
5. Remove 7 screws Ⓘ。 securing the elevator belts of the both sides.
6. Remove one screw securing LED P.C.Board of the P.C.Board.
7. Pull the loding mecha from rear side of the unit after lifting up the mecha to the top.

[NOTE]
When you install the loding mecha, it should be inserted at the top of the inside unit. And then ,lower the mecha to the bottom and secure the both elevator belts so that the mecha can be set horizontally.

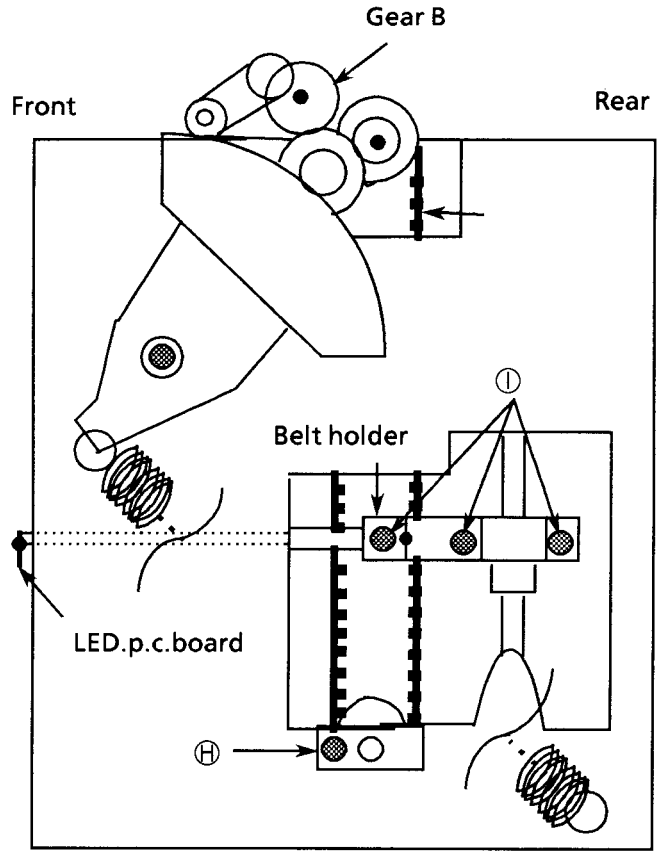

Fig 8. Elevator mechanism ass'y View

(9) Removing the main gear

1 Remove the top cover .
2. Remove the front panel.
3. Remove the mottom base.
4. Remove 3 screws Ⓙ and connectors P823,P812,P813.
5. Remove the sw. P.C.Board(ENN-393-1).
6. Remove slit washers Ⓚ.
7. Remove the sw lever and gear C.
8. Remove the sw main giar.

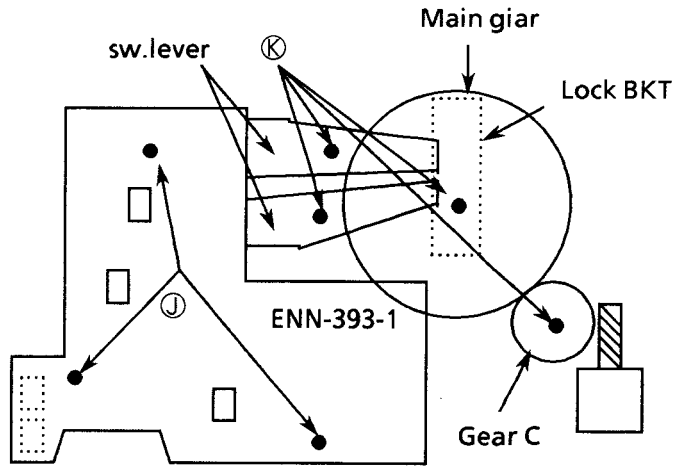

Fig 9. Bottom View

(10) Mount the main gear

1 Move the link assy shown in Fig 10 .
2. Move the lock BKT shown in Fig 10 .
3. Remove the bottom base.
4. Insert the main gear to studA shown Fig 11.
5. Install the slit washer.

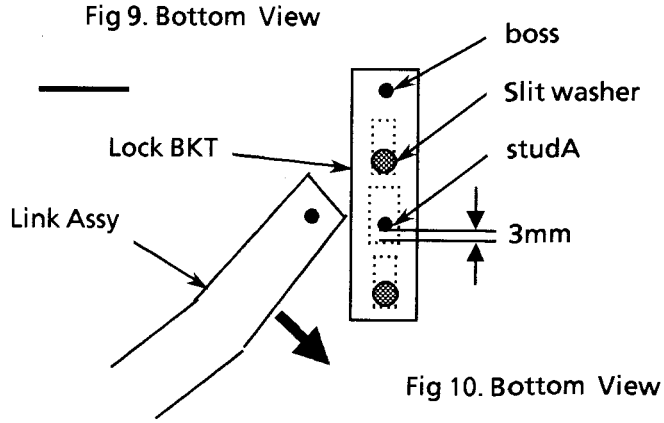

Fig 10. Bottom View

(11) Mount the sw lever

1 Insert the sw lever A boss to the mein gear A' position shown in Fig 11 .
2. Install the slit washer .
3. Insert the sw lever B boss to the mein gear B' position shown in Fig 11 .
4. Install the slit washer to the stud A.

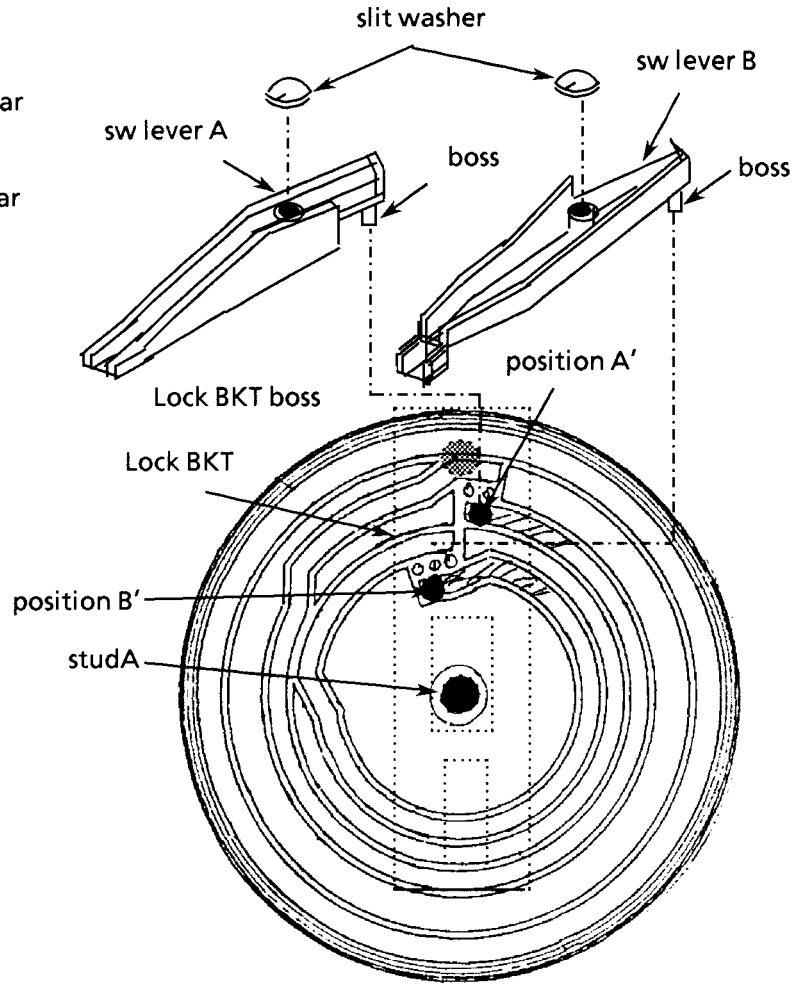

Fig 11. Main gere View

(12) Mount the sw P.C.board(ENN-393-1)

1 Rotate the main gear sothat stop position shown in Fig 11 .
2. Install the circuit board so that the lever of the switches meet the groove of the switches levers(fig 12) .
(You can see the levers and groves from the hole on the circuit foard when installing.)
3. Install the tree screws.

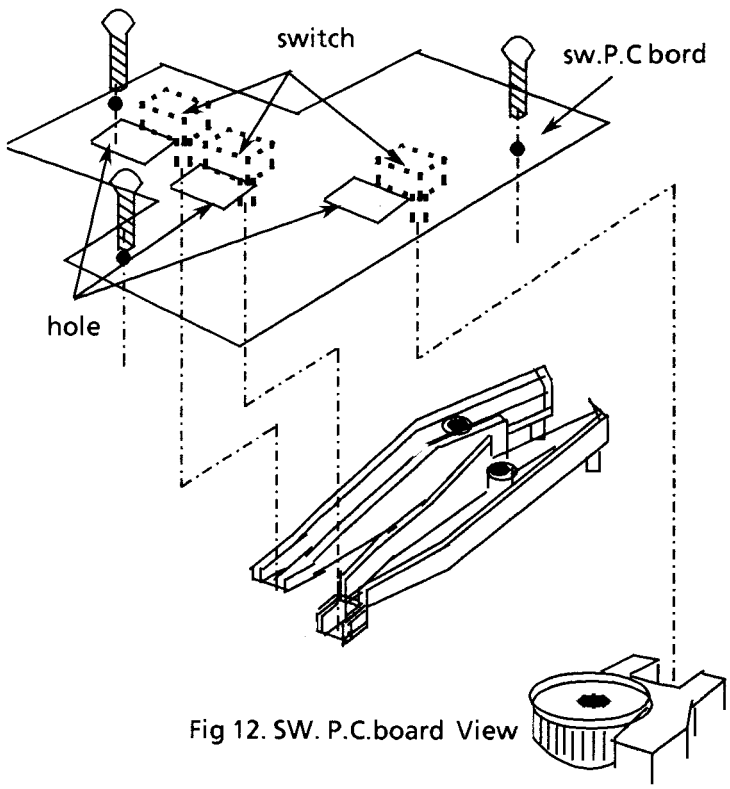

Fig 12. SW. P.C.board View

Disassemble of the cd mechanism assembly

■ Pickup removal

1. Remove the cd mechanism assembly.
2. Release the shaft to remove the pickup (Fig 13).

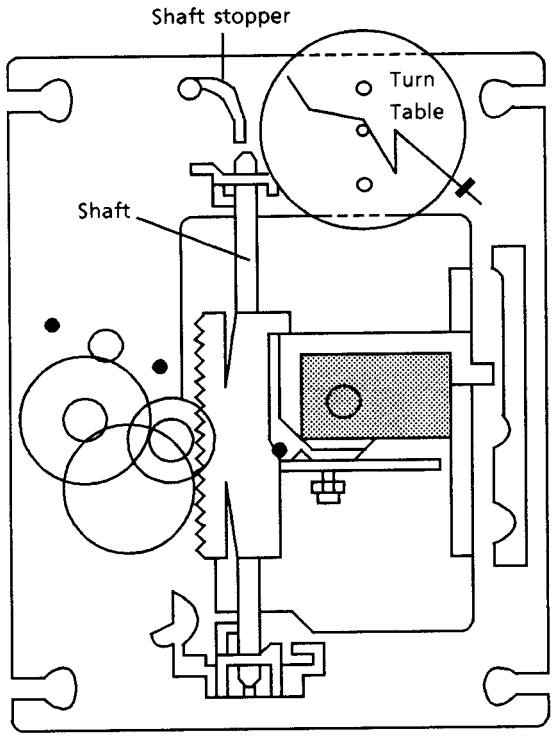

Fig 13 CD mechanism assembly

■ Spindle motor removal

1. Remove the cd mechanism assembly.
2. Remove the turntable, and remove the two screws retaining the spindle motor.
3. Remove the screws retaining the spindle and feed motor P.C. Board and unsolder it.

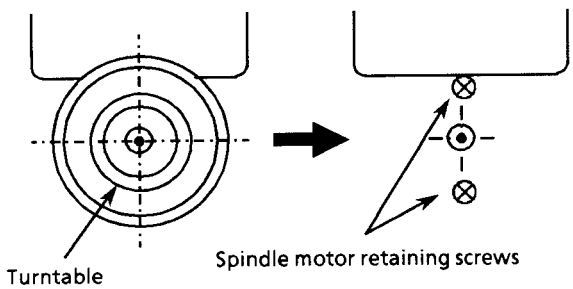

Fig 14

■ Spindle motor installation

1. Tighten the 2 screws to the same torque.
2. Fasten the spindle and feed motor P.C. board with the screw and solder.
3. Install the turntable. When installing, press straight down at the center of the turntable until the distance from the surface of the mechanism base to the turntable is exactly 19.4±0.1mm.

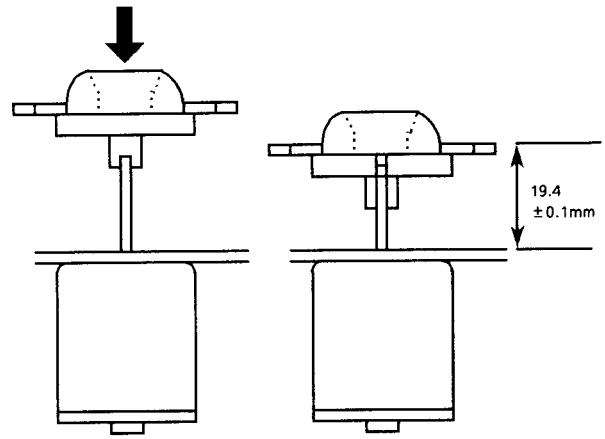

Fig 15

4. After inserting the turntable, bond the motor shaft and turntable together (at the section marked by an arrow in fig 16 on the left below).

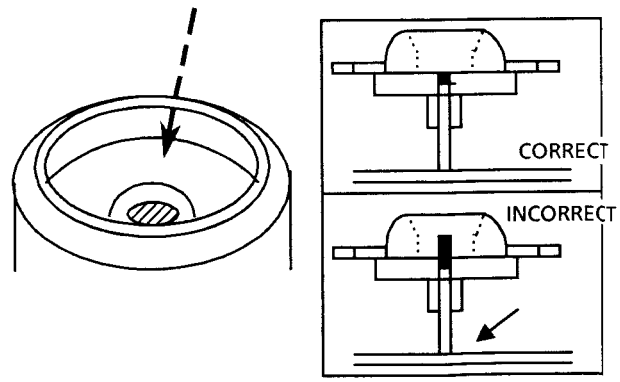

Fig 16

5. Use "LOCKTITE" #460 bonding agent, and apply as little as possible. Take care not to allow any excess bonding agent to get onto the turntable. Be extremely careful not to allow bonding agent to adhere to the motor bearings (the section marked by an allow in fig 16 on the right).

Disassembly Procedures (XL-MC100C)

(1) Removing the Top cover

1. Remove 4 screws fastening both sides of the top cover, and 2 screws fastening the rear side.
4. Remove the top cover.

(2) Removing the Front panel Ass'y(Fig.1)

1. Remove the top cover.
2. Disconnect the connectors P351,P271,P913,P914.
3. Remove 3 screwsⒶ fastening the bottom .
4. Remove the front panel Ass'y.

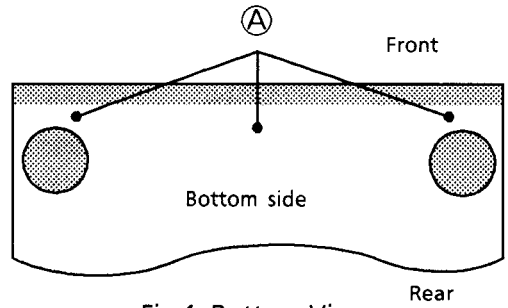

Fig 1. Bottom View

(3) Removing the Rear panel(Fig.2)

1. Remove the top cover.
2. Remove the screws Ⓑ and the screws Ⓒ.
3. Remove the Rear panel.

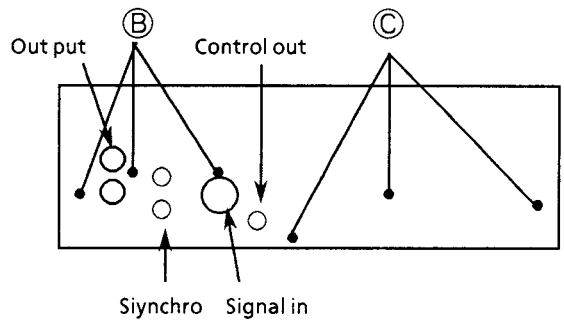

Fig 2. Rear View

(4) Removing the Control P.C. Board(ENN-391-1)

1. Remove the top cover.
2. Remove the Rear panel.
3. Remove the connector P901 .
4. Remove the 3 screws holding the CD P.C. Board.
5. Remove the control. P.C. Board.

Adjustment Procedures (XL-MC100C)

(1) Adjustment measure

Frequency counter.

(2) PLL Adjustment

1. Connect a Frequency counter between TP2 and TP1(GND) .
2. Adjust R294 so that the Frequency counter of the frequency becomes 1.4112 ± 0.00001MHz.

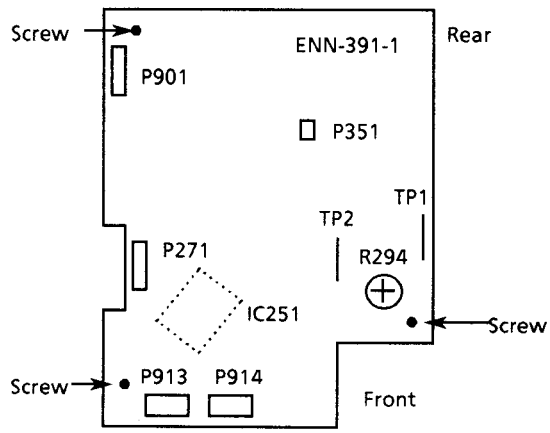

Fig 3. Top View

Adjustment Procedures

■ Comfirming a slant of the elevator

1) Remove the top cover and the rear panel of the mechanism unit.
2) Pull the lock lever in the direction of the arrow shown in Fig .12 to open the door.
3) Take the trays numbered 26 and 76 out.
4) Rotate the B gear , and move the elevator mechanism ass'y to the trays numbered 26 and 76.
5) Confirm that the elevator is not slant : ℓ is equals to ℓ' in Fig .13.
6) Loose the screws ② and ③ .
7) Adjust the screw ① so that the elevator becomes horizontal .
8) Fix the screws ② and ③ .

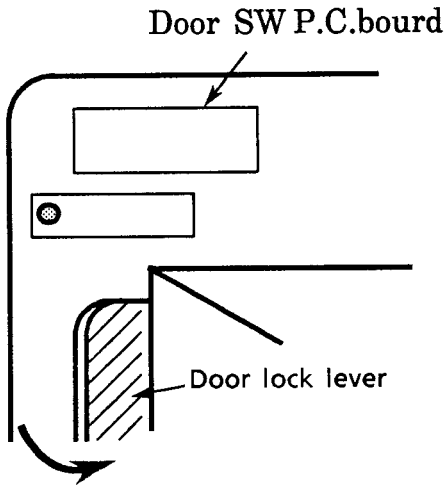

Rear View

Fig 12. Door lock lever View

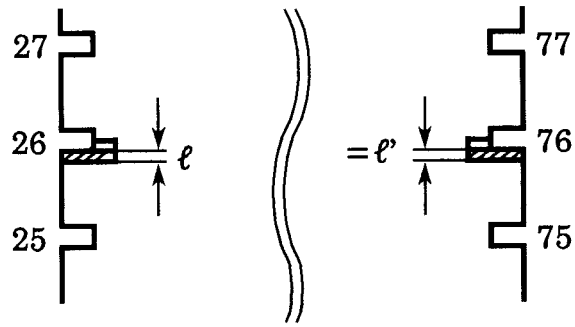

Front View

Fig 13.Tray surit ass'y View

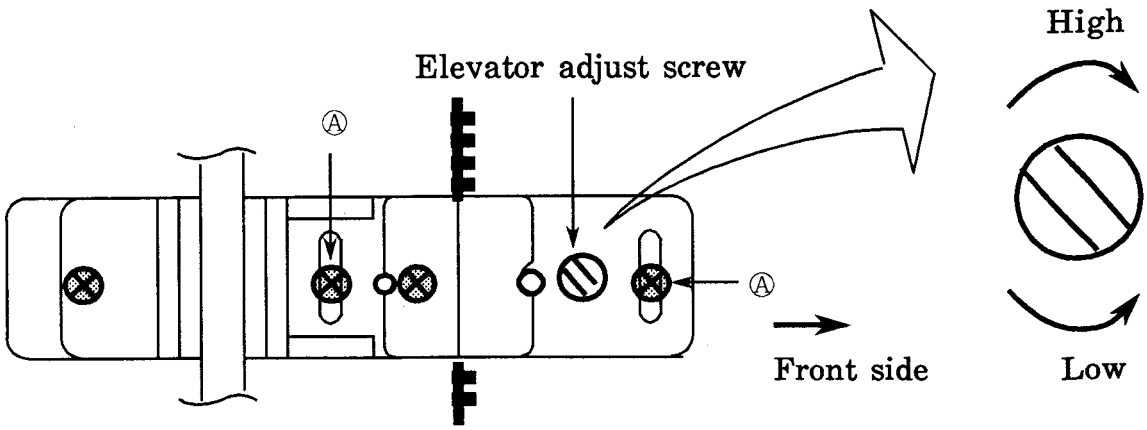

Fig 14. Elevator adjust screw View

■ High adjustment of the elevator

1) Remove the cover .
2) Connect the mains cord of the mechanism unit only with the outlet.
3) Open the door.
4) Take the disc trays 25.
5) Push the door SW using the like to turn the switch on shown fig 15 .
6) Push the switch S842 on the circuit board (ENN-392-1)at the rear side of the mechanism.
7) The elevator goes up and down as follows .

Reset position (R) → disc tray **25** → (R)

- The unit does not a disc . (The elevator stands by at the rest position during constant time.)
- The mesha stops at the position after setting door switch OFF when the tray is on No.25 rail.

8) Comfirm if the elevator rail is at the height of the tray rail of disc 25 .

● Adjustment

9) Turn the elevator adjust screw to adjust the height of the elevator rail.

(Note) Since the pitch of the screw is 0.4mm,a turn of the screw makes a change of 0.4mm.

10) Set the door switch ON again,and repeat the procedure(7)~(9) so that the position of the rail in the elevator can be the same as the one for the tray installing shelf.
11) Bond the screw "BOND" #1401C used.

- The mecha moves to No.25 disc tray to return the tray when S842 is pressed after setting the door switch ON. And, it moves to No.49 disc tray and returned to mecha reset position (R),then the check mode is released.

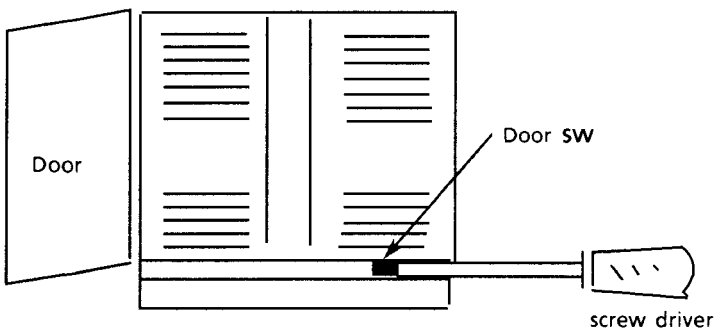

FRont View

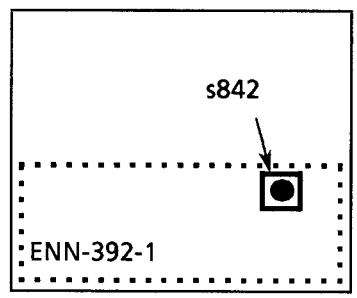

Rear view

Fig 15. Door sw test sw View

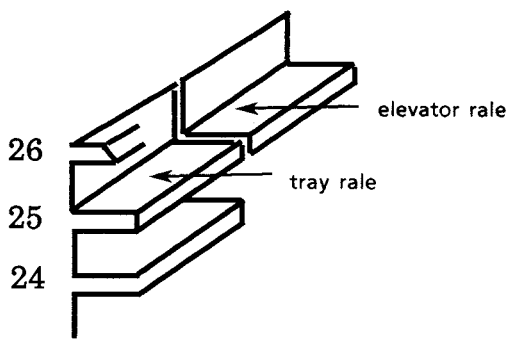

Fig 16. tray rale and elevatorrale View

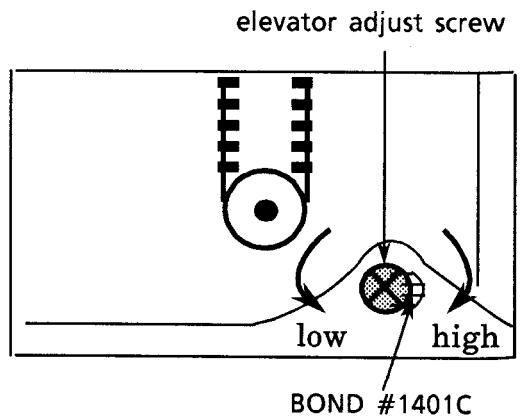

Fig 17.Top View

■ CD adjustment

(1) Adjustment measure
Oscilloscope , Test disc (CRG-1117)

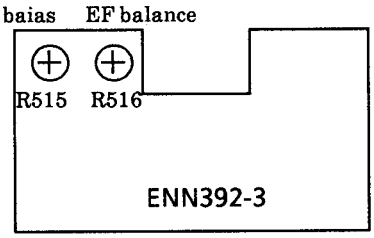

(2) Procedures

1) FE baias

① Connect a oscilloscope between TP6(FE) and TP3(GND) .
② Adjust R515 so that the DC voltage at TP6 becomes 0±0.01V.

2) EF balance

① Connect a oscilloscope between TP4(TE) and TP3(GND) and play the test disc.
② Adjust R516 so that the center voltage of the waveform becomes 0±0.05V.

3) Gain adjustment

If the gain is out of adjustment, the symptoms below will appear.
As described above, the focus and tracking gainadjustment are performed to satisfy mutually contradictory characteristics.
Asimplified adjustment procedure is described below. However, since exact adjustment can not be performed prior to adjustments, note(or mark) the positions of the semi-fixed resistors.
If the positions after the adjustment are only different, return the VRs to their original position.

Focus gain adjustment

1. Connect an oscilloscope to TP 6(FE) and TP 3(GND).
2. Load a disc and press the PLAY button.
3. Adjust R603 (F.GAIN ADJ.) so that the waveformbecomes below figure 1.

Tracking gain adjustment

1. Connect an oscilloscope to TP 4(TEIN) and TP 3(GND).
2. Load the test disc and press the PLAY button.
3. Adjust R604 (T.GAIN ADJ.) so that the waveform becomes below figure 2.

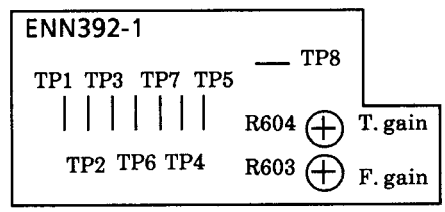

TP1	TEST	TP7	FEIN
TP2	RF	TP4	TE
TP3	GND	TP5	TEIN
TP6	FE	TP8	XCX

● Gain too low

Focus gain : Focus is not obtained and disc does not rotate.
Tracking gain : Mechanical shock occurs easily and sound is interrupted. Or time counter display stop counting .

● Gain too high

Focus gain : Scratches (on the disc) easily interrupt play, and noise is increased during play.
Tracking gain : Since the follow-up ability of the pickup is too high, the pickup may oscillate and oscillating sound may output.

Focus Gain Adjustment

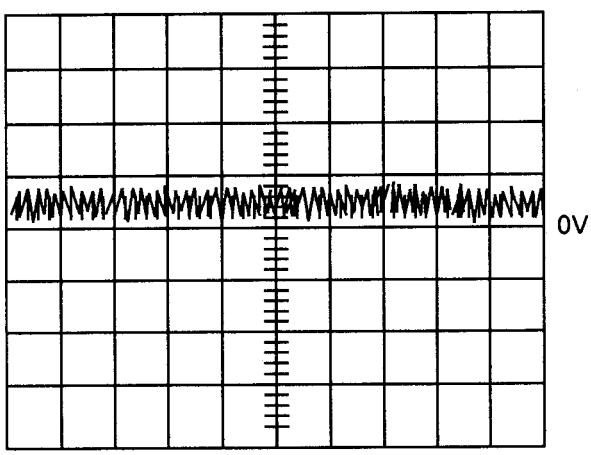

200mV / div. 0.2ms / div.

Figure 1

Tracking Gain Adjustment

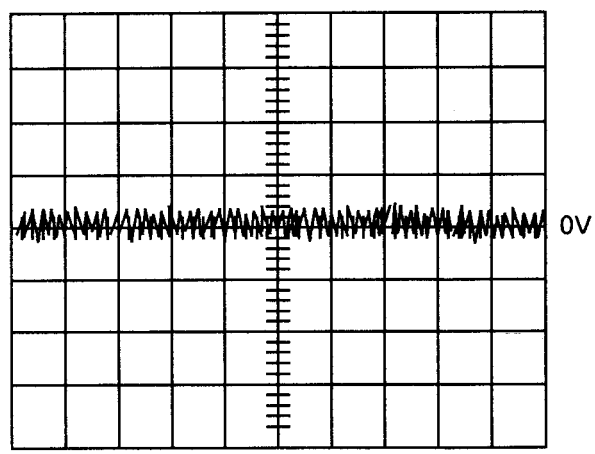

500mV / div. 0.2ms / div.

Figure 2

Flow of Functional Operation Until TOC is Read

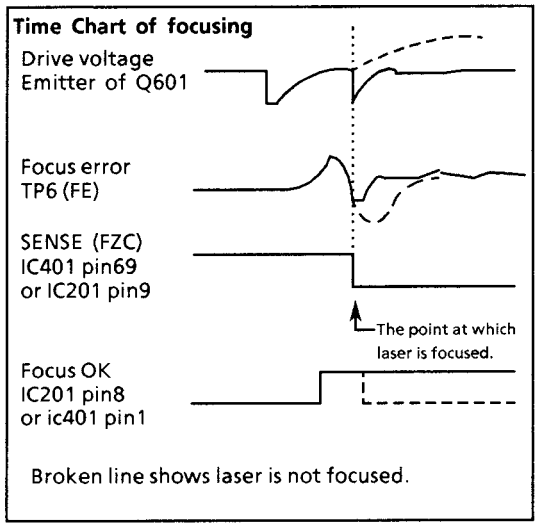

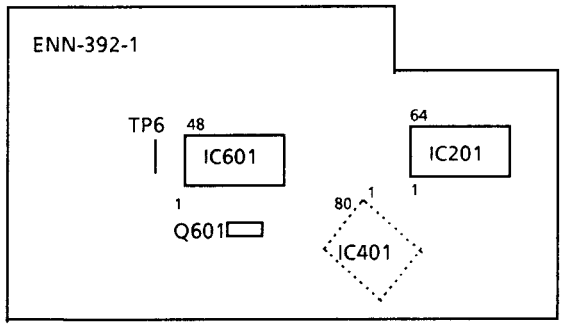

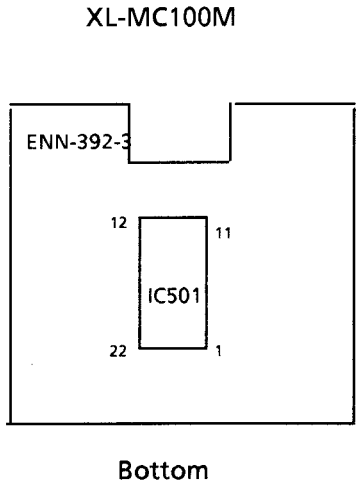

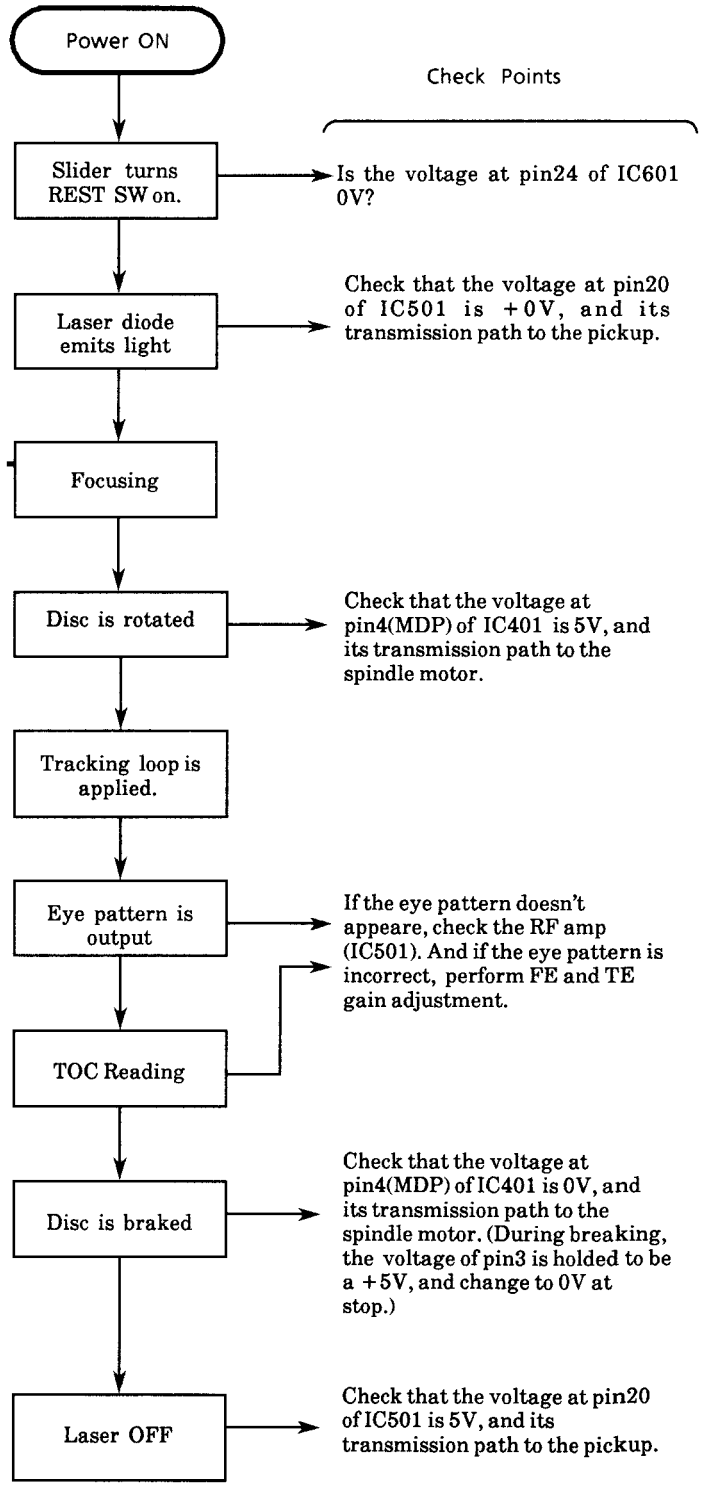

Maintenance of Laser Pickup

(1) Life of the laser diode

When the life of the laser diode has expired, the following symptoms will appear.

1. The level of RF output (EFM output: amplitude of eye pattern) will be low.
2. The drive current required by the laser diode will be increased.
   In such a case, check the life of the laser diode by the flowchart below

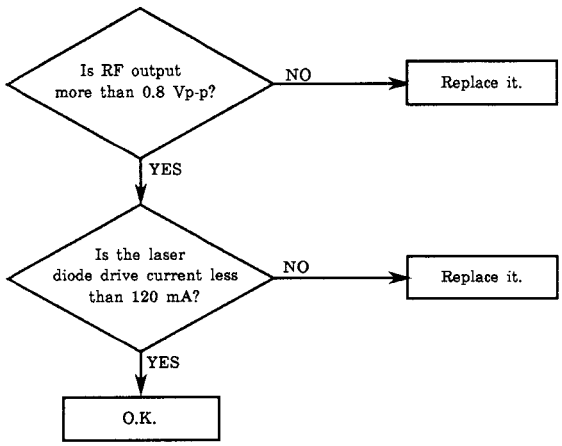

(2) Measurement of laser diode drive current

Measure the voltage across the resistor R507 by using a milli-voltmeter. When the voltage is more than 1.2V, it shows that the life of the laser diode has expired.

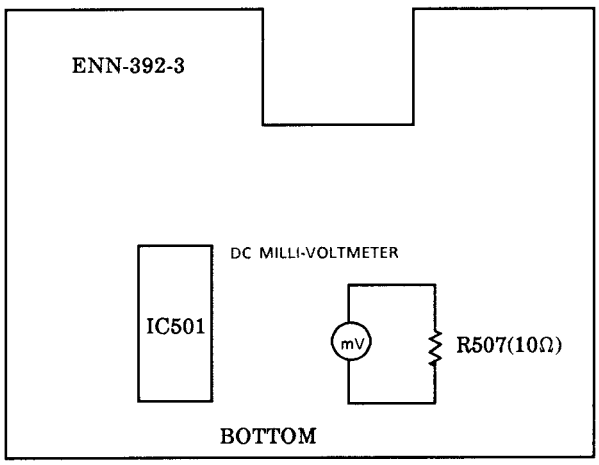

(3) Semi-fixed resistor on the APC PC board

The semi-fixed resistor on the APC printed circuit board which is attached to the pickup is used to adjust the laser power. Since this adjustment should be performed to match the characteristics of the whole optical block, do not touch the semi-fixed resistor.

If the laser power is lower than the specified value, the laser diode is almost worn out, and the laser pickup should be replaced.

If the semi-fixed resistor is adjusted while the pickup is functioning normally, the laser pickup may be damaged due to excessive current.

Replacement of Laser Pickup

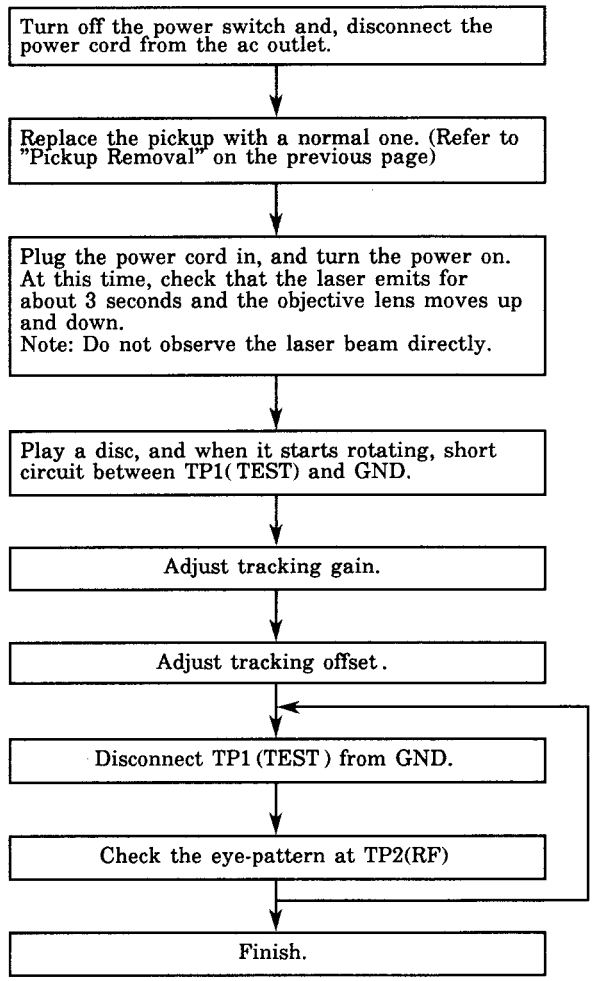

Note: Since one adjustment may affect other settings, repeat these adjustments a few times.

Operation of each switch and senser(XL-MC100M)

S801 Door open/close SW
For detecting the door opened or closed.
The switch is turned on when the door is closed.

S802 Reset position detect SW
For detecting the elevator is at the rest position.
The switch is turned on when the elevator is at the rest position.

PH804 Photo senser
The height of the elevator is detect by the senser.

S805 Tray stopper open /close SW
When the tray stopper is closed, pin 6 of P812 is on .
When the tray stopper is opened, pin 5 of P812 is on .

S807 Tray loading SW
The switch is on turned on when a tray is loaded.

S808 Pickup position detect SW
Pin 4 of P812 is on when the traverse mechanism is at the right.
Pin 3 of P812 is on when the traverse mechanism is at the left.

S810 Tray JAB SW
The switch is turned on when a tray is returned into the holder.

S811 Door lock senser SW
Pin 1 of P812 is on when the base is opened.

Operation of each motor(XL-MC100M)

M1 Elevator up/down motor

M2 Tray stopper open/close motor

M3 Tray loading motor

M4 Traverse mechanism moving / door open motor

Position of switch and motor

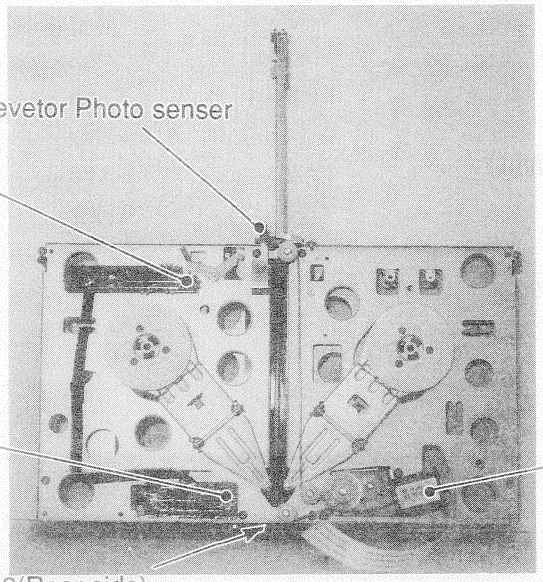

Loding mecha ass'y

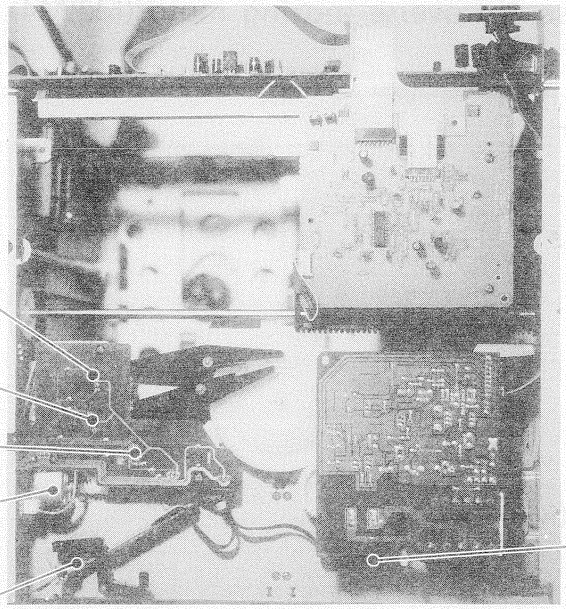

Bottom View

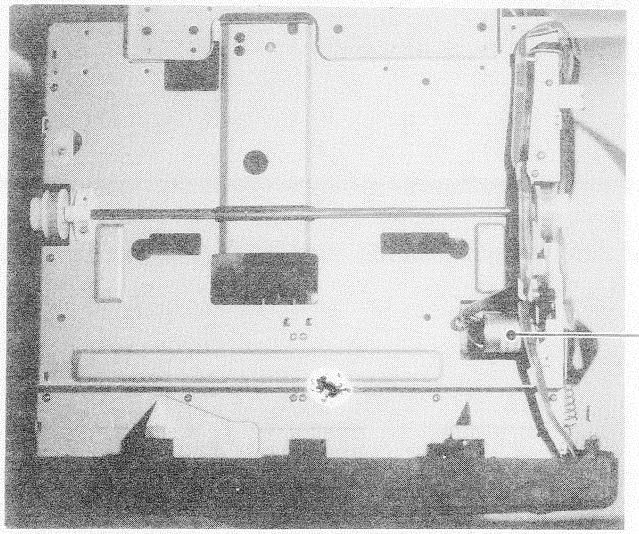

Top View

Motor pully height

Elevator up/down motor(M1)

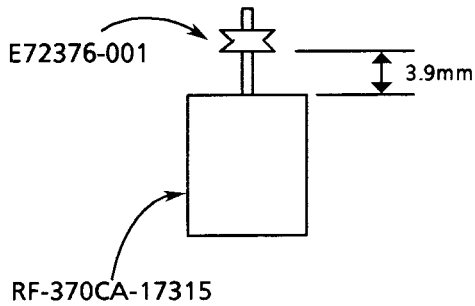

Tray stopper open/close & traverse moving motor(M2,M4)

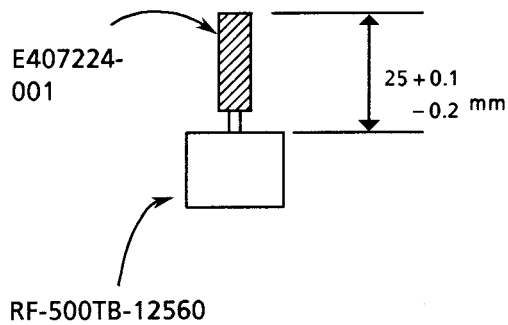

Tray loading motor(M3)

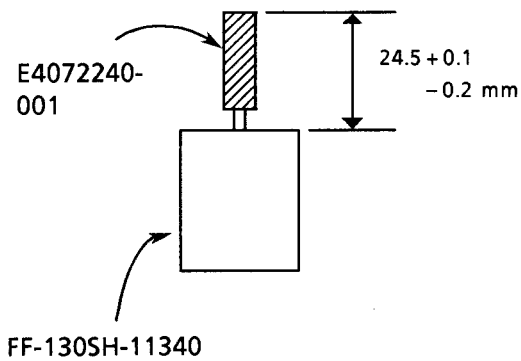

BASIC MOVING (XL-MC100M)

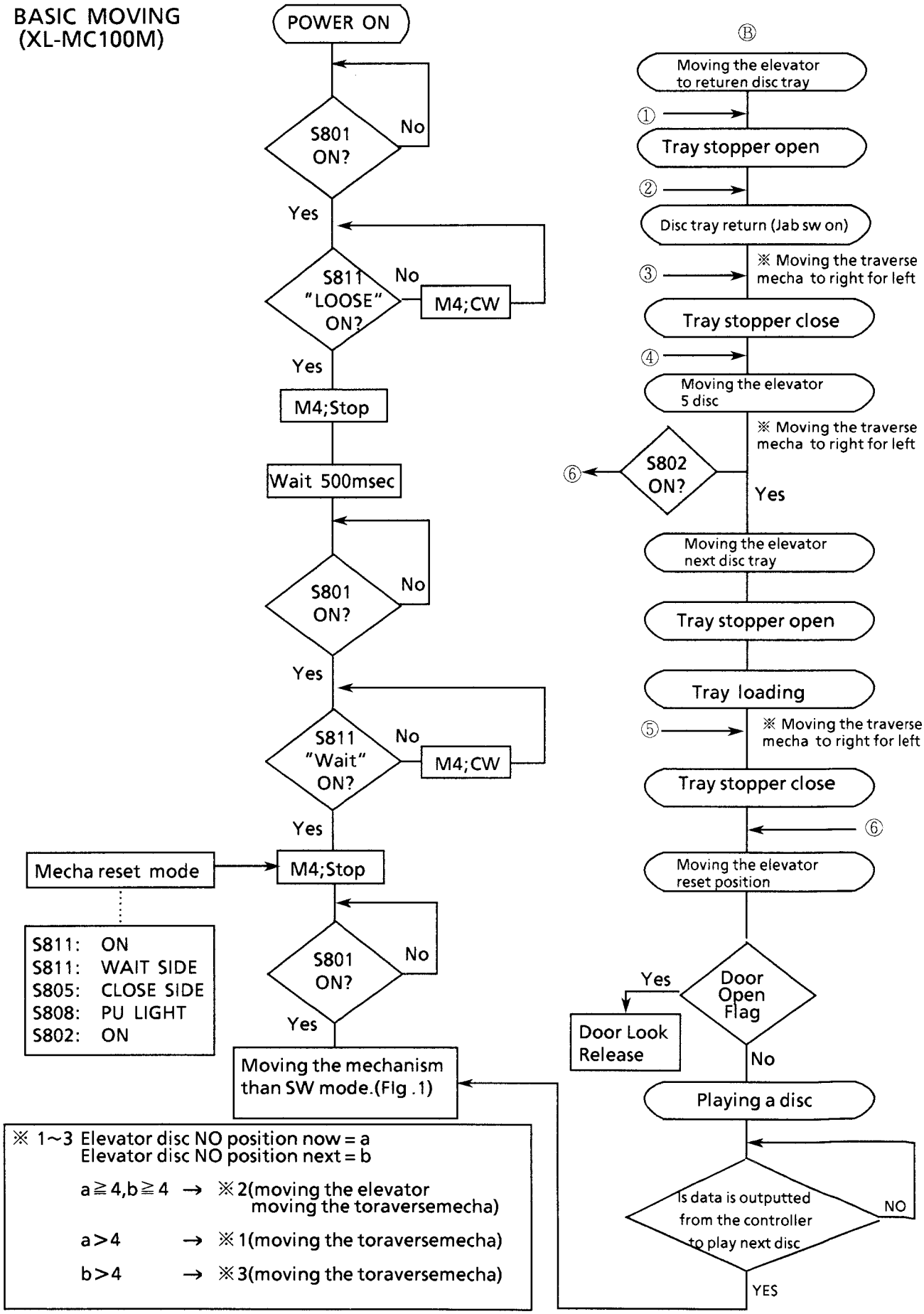

Moving the mechanism than SW mode

S807	S810	S805 Open	S805 Close	S802 = off mechanisum position	S802 = on mechanisum position
off	off	off	off	①	①
off	off	off	on	①	①
off	off	on	off	②	②
off	off	on	on	×	×
off	on	off	off	②	③
off	on	off	on	②	④
off	on	on	off	②	③
off	on	on	on	×	×
on	off	off	off	⑤	⑤
on	off	off	on	④	Ⓑ
on	off	on	off	⑤	⑤
on	off	on	on	×	×
on	on	off	off	×	×
on	on	off	on	×	×
on	on	on	off	×	×
on	on	on	on	×	×

Fig . 1 × → stop the mechanism

※ Ⓑ mode
- Tray stpper close
- Turned on when a tray is loaded.
- Moving the loadingmecha

◦ Traverse movement (Time out 6second)

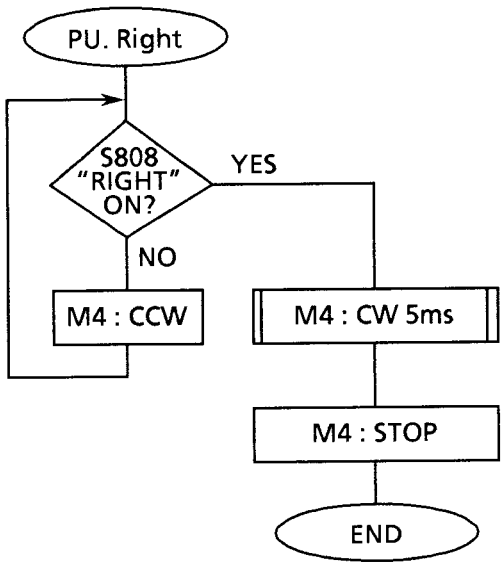

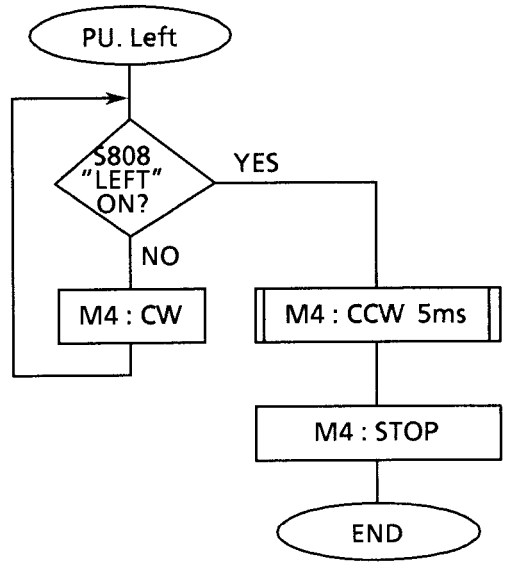

◦ Elevator movement (Time out 10-second)

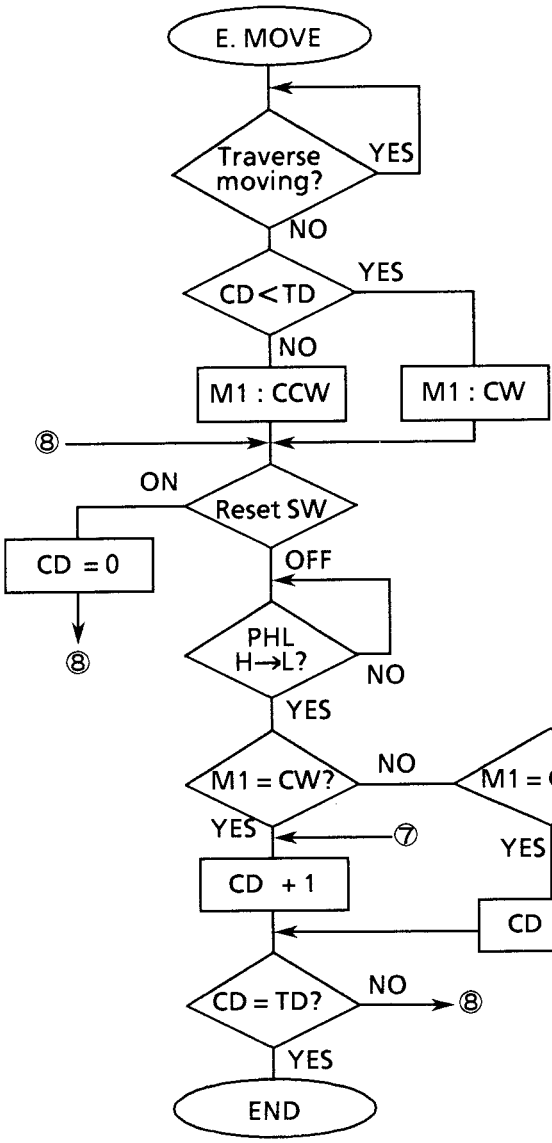

CD : Current disc number
TG : Target disc number
PHL : Slit detector
PHL signal is outputted when the senser across lower edge of the slit.
CW : Clockwise
CCW : Counterclockwise

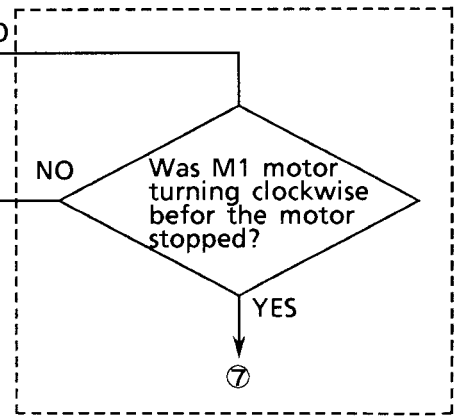

◦ Tray Stopper Open

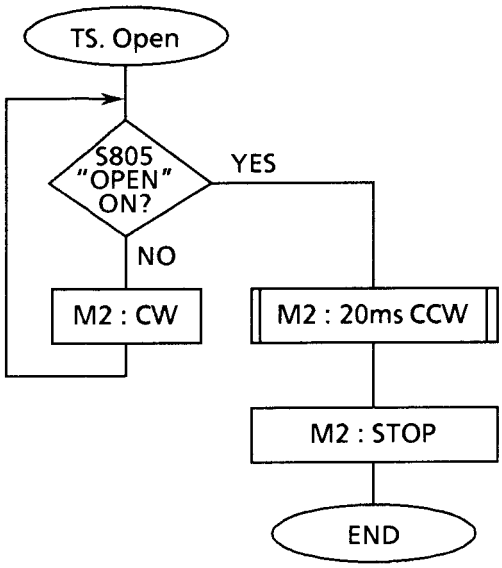

◦ Tray Stopper Close

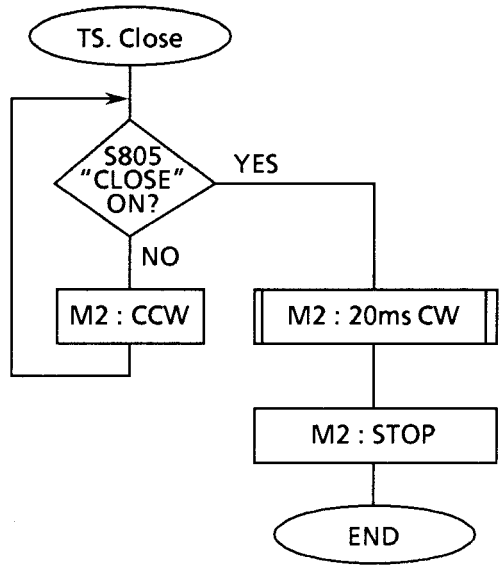

◦ Jab (When the tray is returned from the elevator to the tray holder)

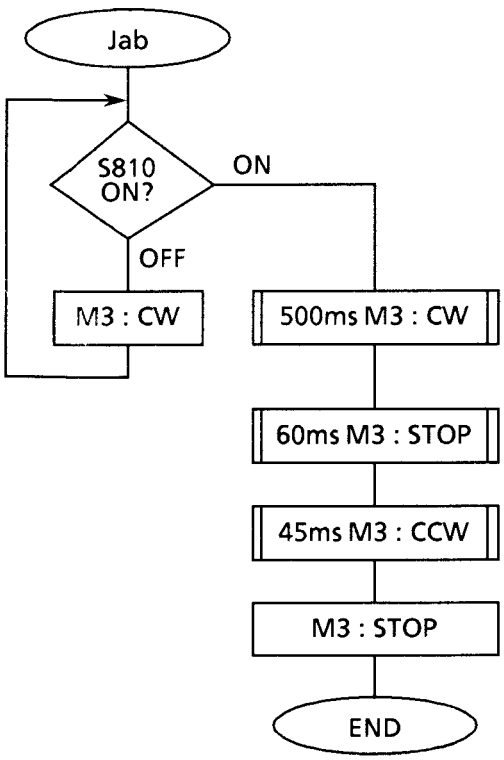

◦ Load (When the tray is load from to the tray holder the elevator)

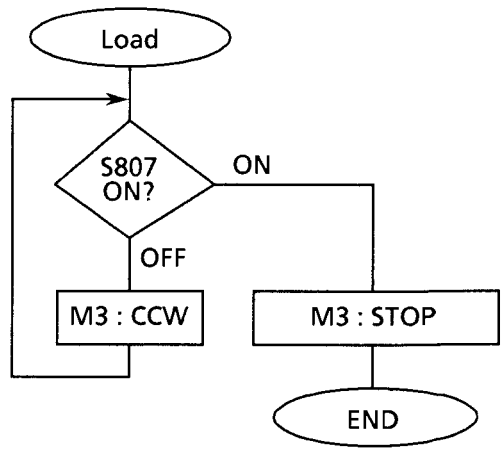

Causes for mechanism malfunctions

1) The shutter does not open.
   Cause ① The tray touches the shutter.
   ② The link for driving the shutter is bended.
   (The link is good if it returns automatically by the when you move the link after removing the rack.
   ③ Jamming worm gear.
   ④ Connections of S805 and M2 are bad.(Wire ,solder,connector,parts etc.)
   ⑤ Pins of the shutter do not meet the cams of the link and side panel.

2) The traverse mechanism does not move right and left .
   Cause ① The elevator assembly interferes with the traverse's move.
   ② The pickup base is not installed correcty.
   ③ The flut wire FW101 interferes with the pickup base.
   ④ SW LEVER (D)and (P),and Lock bracket are not installed to the main gear correctly.
   ⑤ Connections of S808 and M4 are bad.
   ⑥ The pickup base does not gear into the main gear because of the guide shaft for the pickup base bended.

3) The door does not open.
   Cause ① The main gear does not tune normally.
   ② The link is not installed in the main gear correctly.

   The door can be opened by opening the door lock base on the right side of the front panel ,or pushing the circuit board with S801 using a screwdrinor through the hole on the front of the bottom cover,when the traverse mechanism is in the right of the machine in the front view.When the elevator is in the left ,mone the elevator right after removing the metal cover ,rear panel and CD cercuit board. So the door can be opened with the method mentioned above.

4) The elevator cloes not go up and down.
   Cause ① Transport lock is not released.
   ② The tray loading hook touches a tray.
   ③ A tray interferes with the elevator's move .
   ④ The elevators LEDand braket touches the center panel.
   ⑤ The wiring for the motor M1 is in correct.

5) The elevator does not stop at the right position.
   Cause ① PH804 is bad.
   ② The wire between P801 and P802 is broken.
   ③ Friction between the shaft and guide.
   ④ The springs on the right side of the elevator are off.
   ⑤ Deterioration of the gear for the elevator up and down .
   ⑥ The elevator is slant.
   ⑦ The height adjustment is missed.

6) Tray can not be loaded.
   Cause ① The elevator is slant.
   ② The elevator is not at the right position.
   ③ Loading belt is jammed.
   ④ The elevator is not flat for the loading hook.
   ⑤ The timming belt and hook are off.

Block Diagram

■ FLONT & POWER SUPPLY SECTION

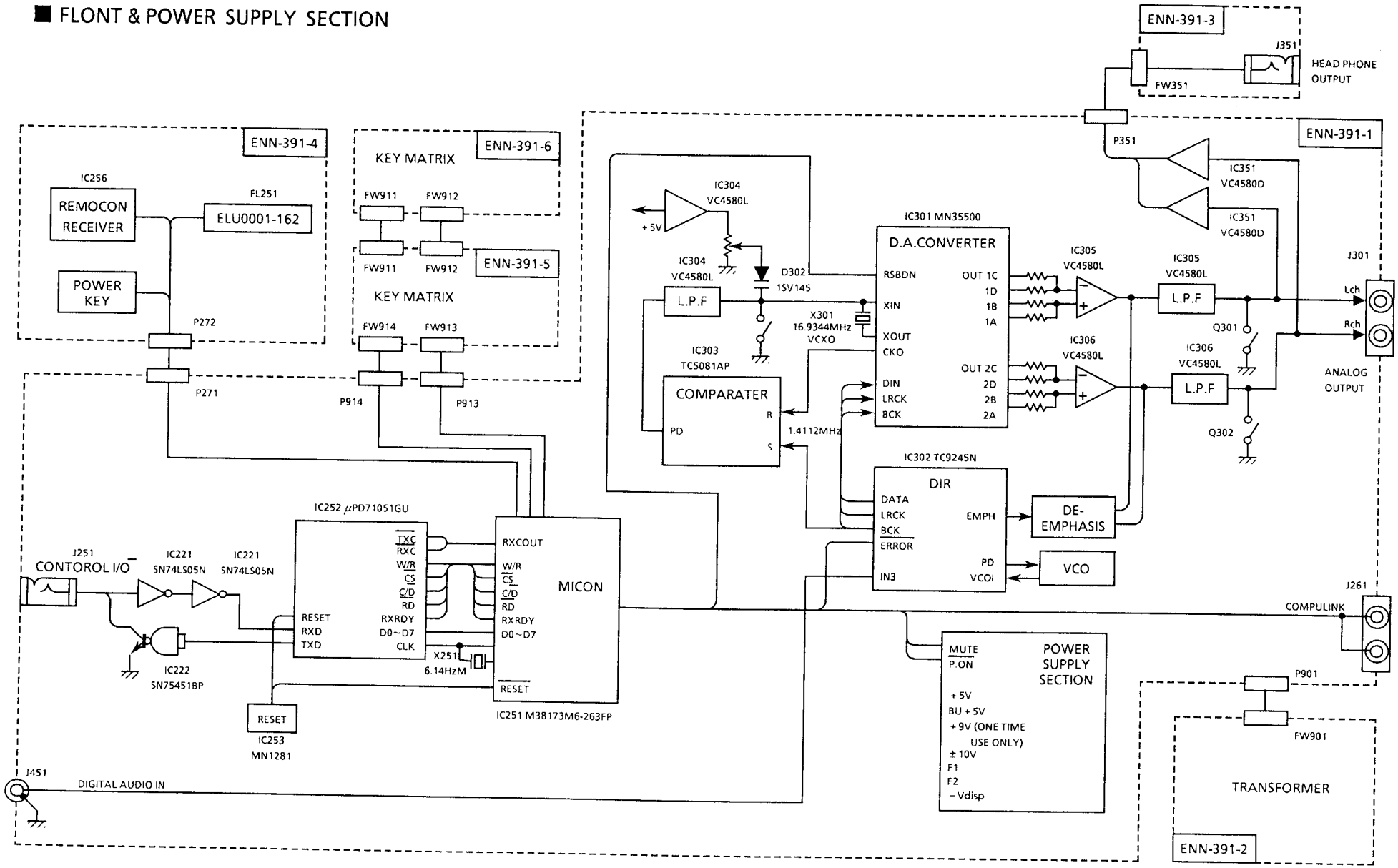

■ MAIN SECTION

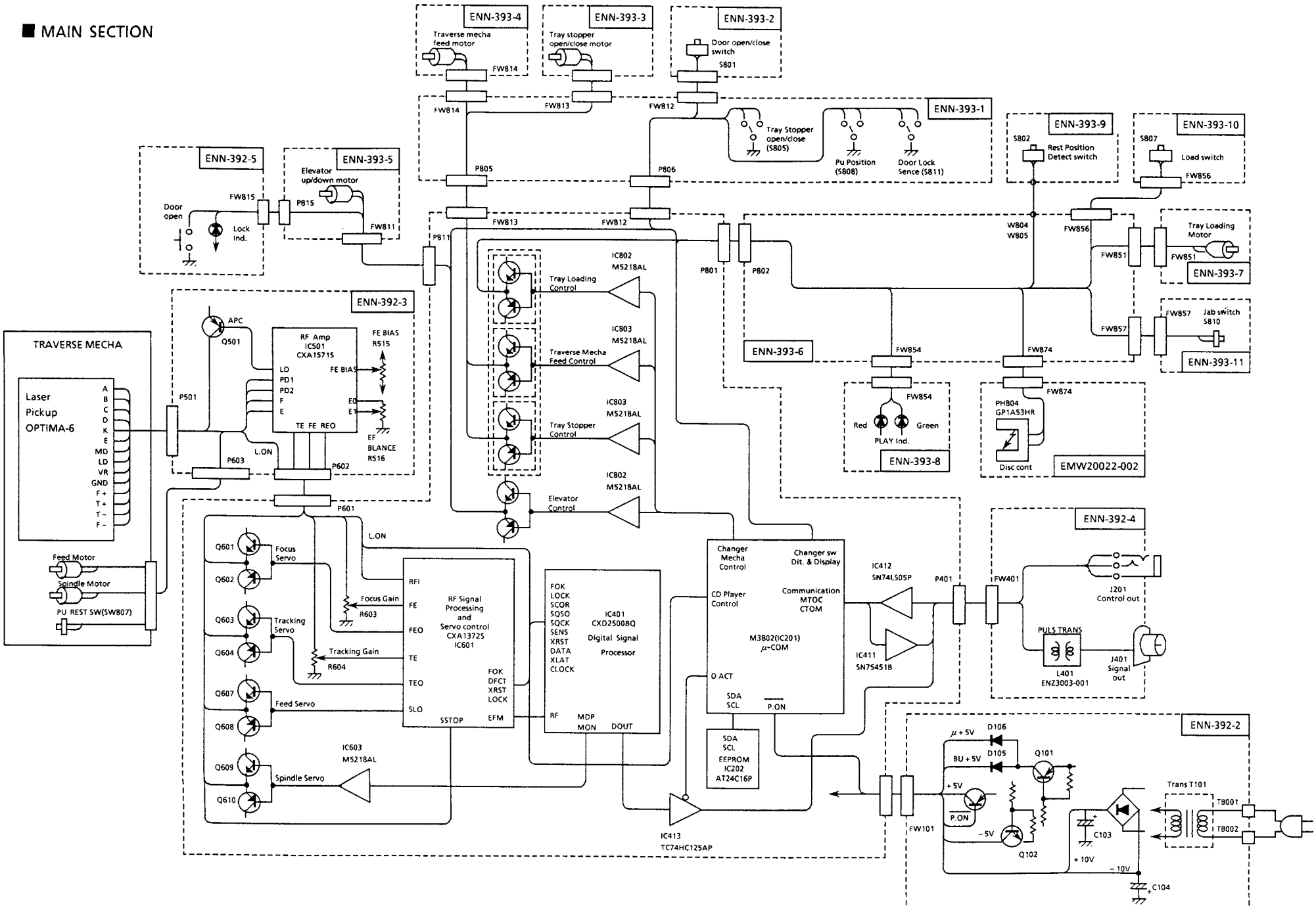

Printed Circuit Board

Mecha Switch P.C.Board(ENN-393)

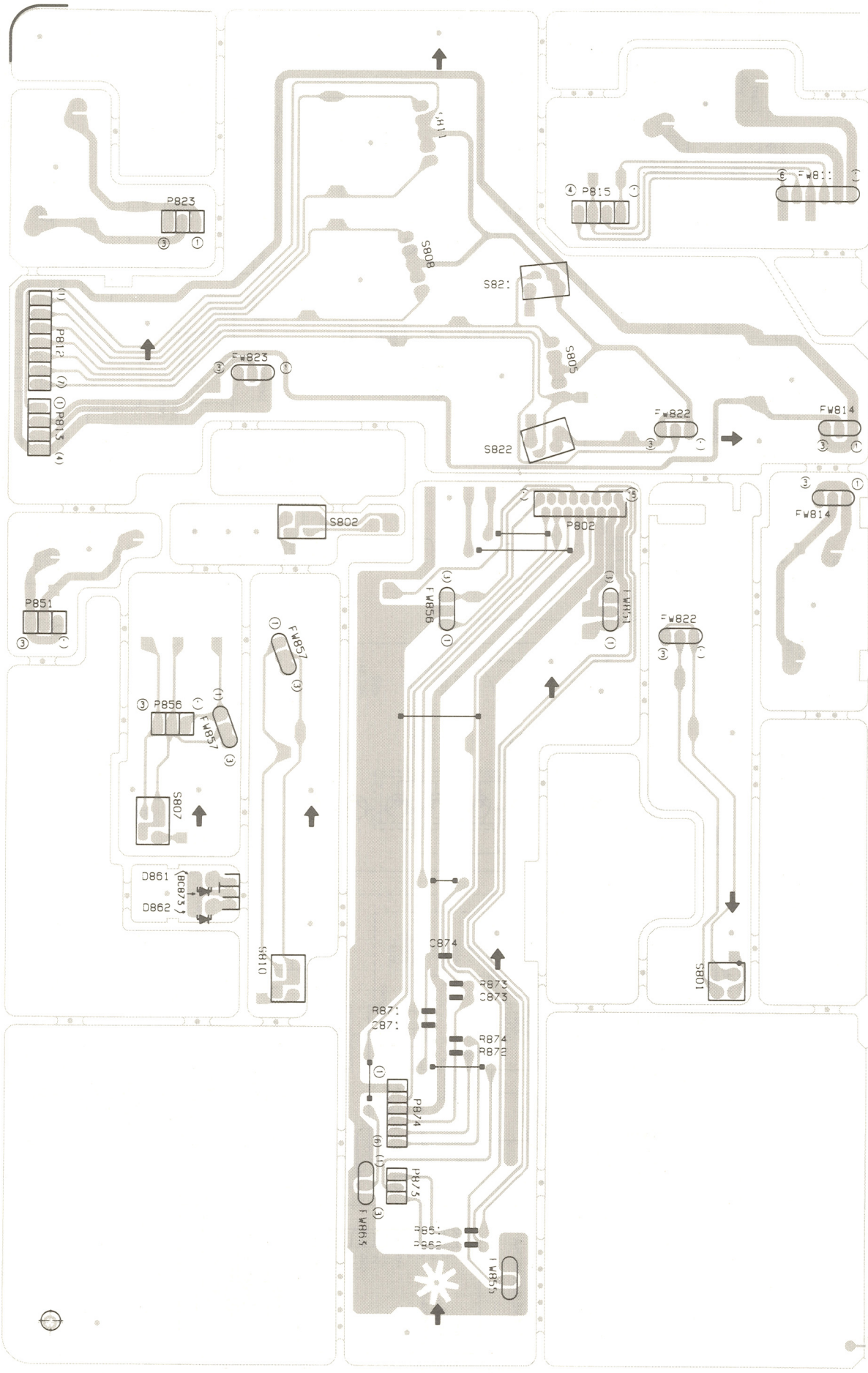

Control P.C.Board(ENN-391)

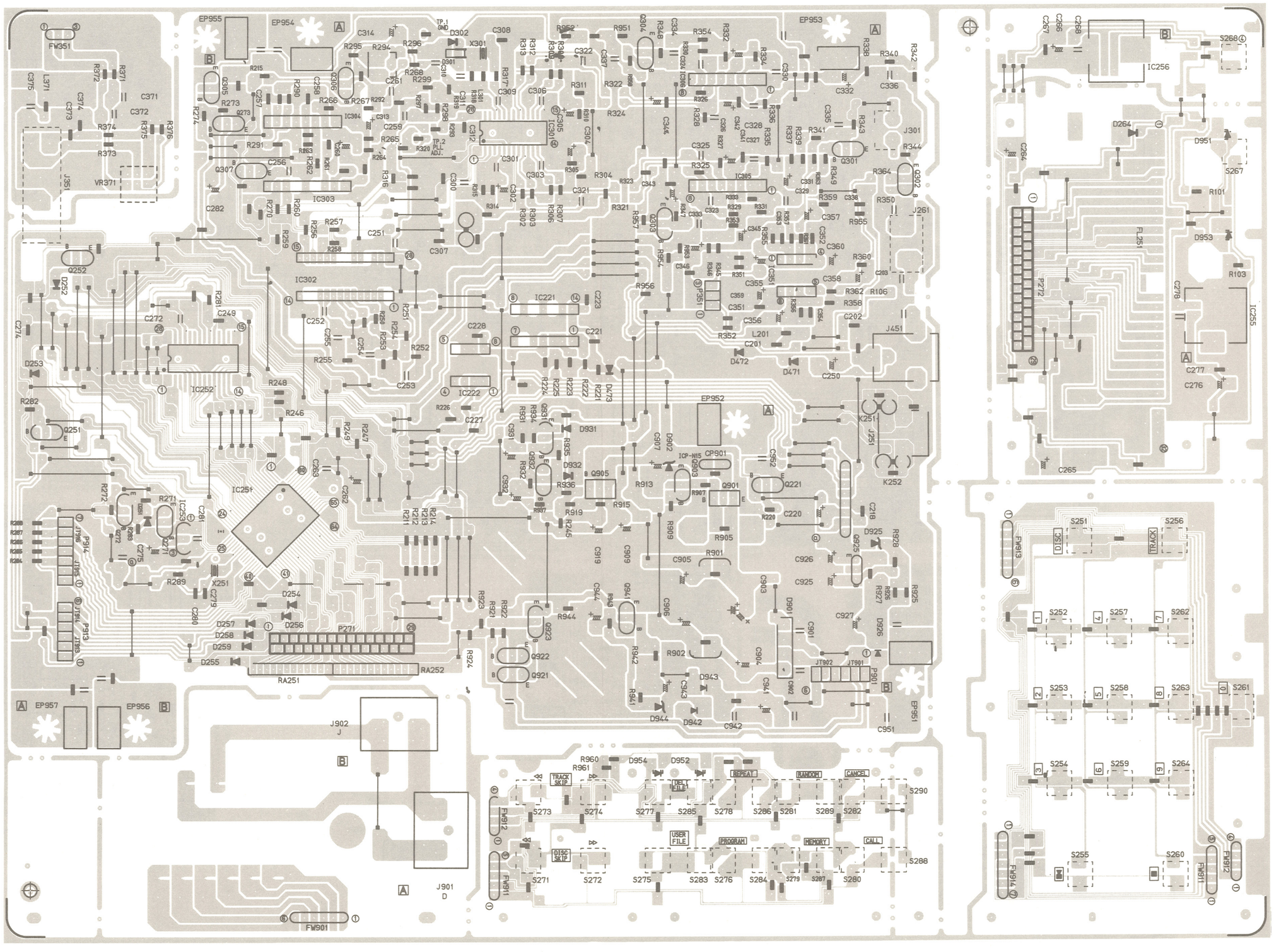

XL-MC100C
XL-MC100M

Power Supply&Servo P.C.Board(ENN-392)

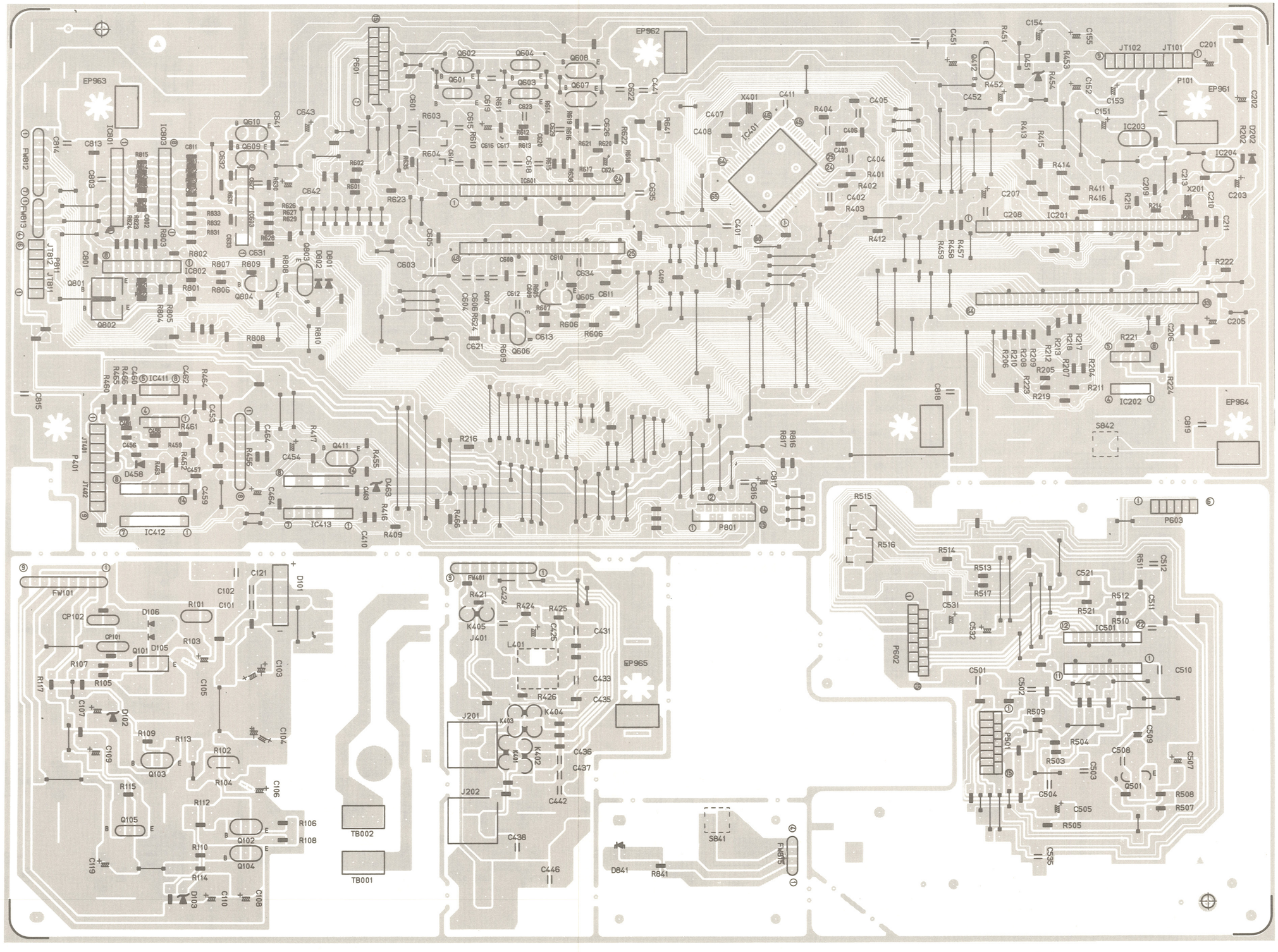

Schematic Diagram

How to Use Schematic Diagrams

1. indicates the +B line.
2. indicates the −B line.
3. indicates signal path.
4. Parts marked with ⚠ and those in the shaded area are parts for safety.
   Be sure to use one with the specified part number.
5. This is the standard circuit diagram. The circuits and circuit constants are subject to change for improvement without notice.

Control Section

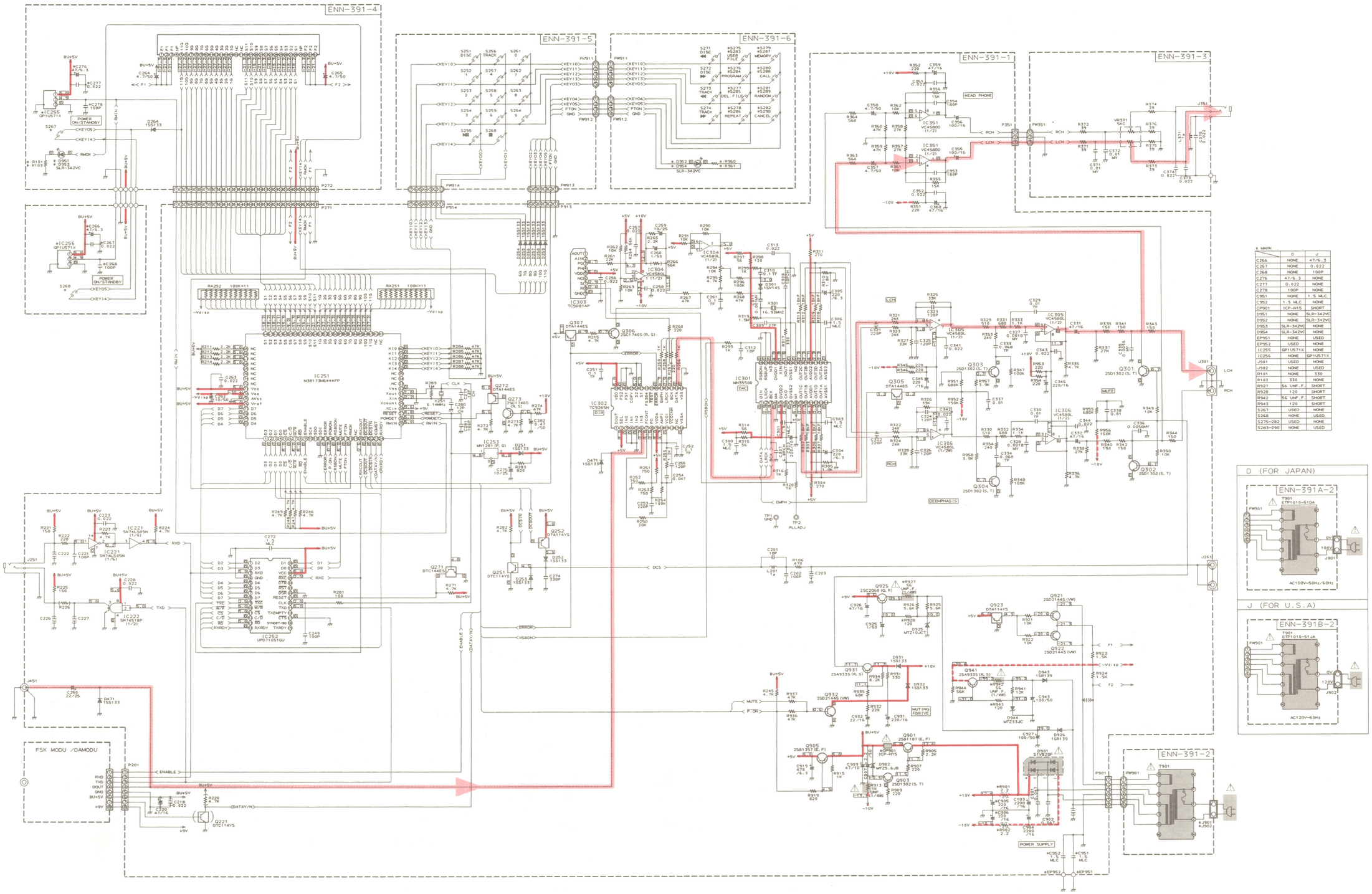

# MARK	D	J
C266	NONE	47/6.3
C267	NONE	0.022
C268	NONE	100P
C276	47/6.3	NONE
C277	0.022	NONE
C278	100P	NONE
C951	NONE	1.5 MLC
C952	1.5 MLC	NONE
CP901	ICP-N15	SHORT
D951	NONE	SLR-342VC
D952	NONE	SLR-342VC
D953	SLR-342VC	NONE
D954	SLR-342VC	NONE
EP951	NONE	USED
EP952	USED	NONE
IC255	GP1U571X	NONE
IC256	NONE	GP1U571X
J901	USED	NONE
J902	NONE	USED
R101	NONE	330
R103	330	NONE
R927	56 UNF.F.	SHORT
R928	120	SHORT
R942	56 UNF.F.	SHORT
R943	120	SHORT
S267	USED	NONE
S268	NONE	USED
S275~282	USED	NONE
S283~290	NONE	USED

XL-MC100C
XL-MC100M

Power Supply&Servo Section

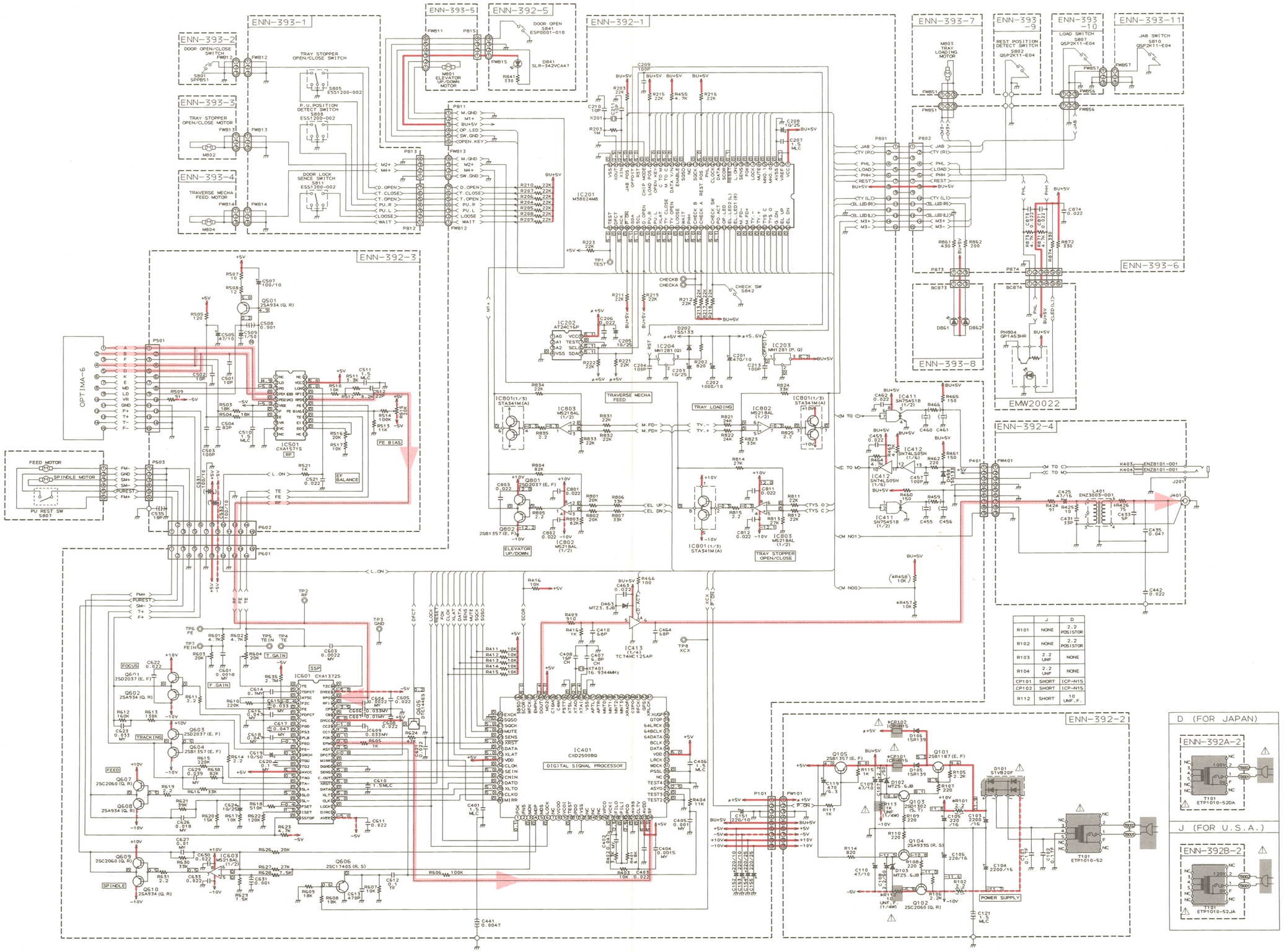

	J	D
R101	NONE	2.2 POSISTOR
R102	NONE	2.2 POSISTOR
R103	2.2 UNF	NONE
R104	2.2 UNF	NONE
CP101	SHORT	ICP-N15
CP102	SHORT	ICP-N15
R112	SHORT	10 UNF.F.

XL-MC100M

<PARTS LIST>

Note : All printed circuit boards and its assemblies are not available as service parts.

Contents

General Exploded View and Parts List 2-2
CD Mechanism Ass'y and Parts List 2-6
Changer Mechanism Ass'y and Parts List 2-7
■ Grease Point 2-7
Printed Circuit Board Ass'y and Parts List 2-13
■ ENN-392 [ ] Main PC Board Ass'y 2-13
■ ENN-393 [A] Mecha Switch PC Board Ass'y 2-16
Accessories 2-17
Packing Materials and Part Numbers 2-18

General Exploded View and Parts List

Symbol No. M 1 M M

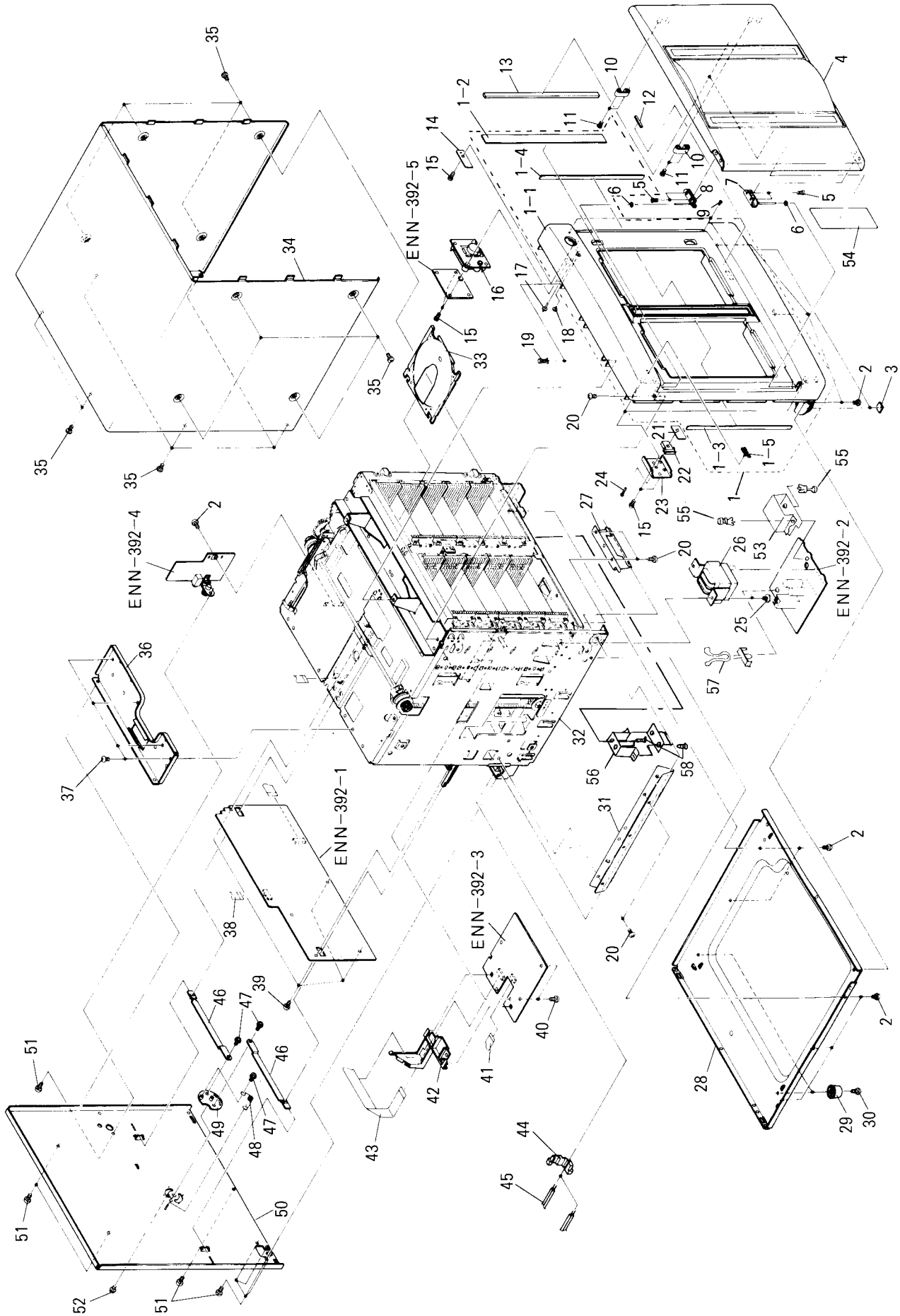

■ Parts List

Symbol No. M 1 M M

⚠	Item	Part Number	Part Name	Q'ty	Description	Area
	1	EFP-XLMC100ME(S	FRONT PANEL ASSY	1		
	1-1	E102783-004ST	FRONT PANEL	1		
	1-2	E208017-003	WINDOW SCREEN	1		
	1-3	E308770-003	PLATE	1		
	1-4	E308770-004	PLATE	1		
	1-5	E406971-221	JVC MARK	1		
	2	SBSG3008M	TAPPING SCREW	10		
	3	E406855-008	SPACER	2		
	4	E102785-005	DOOR	1		
	5	SHSP2606M	SCREW	4		
	6	Q03093-814	POLY WASHER	1		
	7	E308783-002	DOOR BRACKET	1	LOWER	
	8	E308783-001	DOOR BRACKET	1	UPPER	
	9	E69897-002	RUBBER CUSHION	2		
	10	E407847-002	HOOK	2		
	11	SPSF2608M	TAPPING SCREW	4		
	12	E306805-102	SPACER	1		
	13	E408068-001	SPACER	2		
	14	E407902-002	SPRING	1		
	15	SDSF2608Z	SCREW	7		
	16	E308735-003ST	PUSH BUTTON	1		
	17	E407901-001	PUSH ROD	1		
	18	E406686-001ST	C.D INDICATOR	1		
	19	E48729-002	PLASTIC RIVET	2		
	20	GBSG3008Z	TAPPING SCREW	5		BS
		GBSG3008Z	TAPPING SCREW	5		EF
		GBSG3008Z	TAPPING SCREW	5		EN
		GBSG3008Z	TAPPING SCREW	5		G
		GBSG3008Z	TAPPING SCREW	5		U
		GBSG3008Z	TAPPING SCREW	5		US
		GBSG3008Z	TAPPING SCREW	5		UT
	21	E407877-002	SPRING	2		
	22	E407862-001	HINGE HOLDER	2		
	23	E407861-001	HINGE BRACKET	2		
	24	SPSP2610Z	SCREW	2		
	25	E65389-002	SPECIAL SCREW	2		
⚠	26	ETP1010-52EABS	POWER TRANSFORMER	1		BS
⚠		ETP1010-52EA	POWER TRANSFORMER	1		EF
⚠		ETP1010-52EA	POWER TRANSFORMER	1		EN
⚠		ETP1010-52EA	POWER TRANSFORMER	1		G
⚠		ETP1010-52LA	POWER TRANSFORMER	1		U
⚠		ETP1010-52EA	POWER TRANSFORMER	1		US
⚠		ETP1010-52LA	POWER TRANSFORMER	1		UT
	27	E308894-001	PROTECTOR COVER	1		
	28	E102782-001	CHASSIS BASE	1		BS
		E102782-001	CHASSIS BASE	1		EF
		E102782-001	CHASSIS BASE	1		EN
		E102782-001	CHASSIS BASE	1		G
		E102782-002	CD CHASSIS BASE	1		U
		E102782-001	CHASSIS BASE	1		US
		E102782-002	CD CHASSIS BASE	1		UT
	29	E47227-010	FOOT ASSY	2		
	30	SBSG3010Z	TAPPING SCREW	2		
	31	E308895-001	PROTECT SHEET	1		BS
		E308895-001	PROTECT SHEET	1		EF

⚠	Item	Part Number	Part Name	Q'ty	Description	Area
		E308895-001	PROTECT SHEET	1		EN
		E308895-001	PROTECT SHEET	1		G
		E308895-001	PROTECT SHEET	1		U
		E308895-001	PROTECT SHEET	1		US
		E308895-001	PROTECT SHEET	1		UT
	32	----------	CHANGER MECHANISM ASSY	1	SEE PAGE 2-7	
	33	E102740-002	CD TRAY	100		
	34	E102789-004	METAL COVER	1		
	35	SDSG3008M	SCREW	14		
	36	E208031-002	REAR BRACKET	1		
	37	SBST3006Z	TAPPING SCREW	4		
	38	EWR115M-17BB	FFC CABLE	1		
	39	SBSG3008Z	TAPPING SCREW	4		BS
		SBSG3008Z	TAPPING SCREW	4		EF
		SBSG3008Z	TAPPING SCREW	4		EN
		SBSG3008Z	TAPPING SCREW	4		G
		SBSG3008Z	TAPPING SCREW	7		U
		SBSG3008Z	TAPPING SCREW	4		US
		SBSG3008Z	TAPPING SCREW	7		UT
	40	SBSF2608Z	TAPPING SCREW	2		
	41	EWR615M-10BB-X	FLAT WIRE ASSY	1		
	42	E308717-002	WIRE HOLDER	1		
	43	EWPZ01-003	FFC CABLE	1		
	44	QHS3771-108BS	P.W.BOARD STOPPER	1		BS
⚠	45	QMP5530-250BS	POWER CORD	1		BS
⚠		QMP3900-250	POWER CORD	1		EF
⚠		QMP3900-250	POWER CORD	1		EN
⚠		QMP3900-250	POWER CORD	1		G
⚠		QMP7520-250	POWER CORD	1		U
⚠		QMP3900-250	POWER CORD	1		US
⚠		QMP7520-250	POWER CORD	1		UT
	46	E308772-001	LOCK PLATE	2		
	47	E72405-001	SPECIAL SCREW	3		
	48	E407932-001	TORSION SPRING	1		
	49	E308773-001	LOCK KNOB	1		
	50	E102787-008	REAR PANEL	1		BS
		E102787-008	REAR PANEL	1		EF
		E102787-008	REAR PANEL	1		EN
		E102787-008	REAR PANEL	1		G
		E102787-009	REAR PANEL	1		U
		E102787-008	REAR PANEL	1		US
		E102787-009	REAR PANEL	1		UT
	-	E308453-032	RATING LABEL	1		EF
	-	E308453-032	RATING LABEL	1		EN
	-	E308453-033F	RATING LABEL	1		G
	-	E308453-032	RATING LABEL	1		US
	-	E308287-045	RATING LABEL	1		UT
	51	E73273-006	SPECIAL SCREW	8		
	52	E72405-002	SPECIAL SCREW	1		
	53	E309136-001	PROTECT COVER	1		BS
		E309136-001	PROTECT COVER	1		EF
		E309136-001	PROTECT COVER	1		EN
		E309136-001	PROTECT COVER	1		G
	54	E408085-001	CAUTION LABEL	1		
	55	E48729-008	PLASTIC RIVET	2		BS

⚠	Item	Part Number	Part Name	Q'ty	Description	Area
		E48729-008	PLASTIC RIVET	2		EF
		E48729-008	PLASTIC RIVET	2		EN
		E48729-008	PLASTIC RIVET	2		G
	56	E408240-001	BRACKET	1		U
		E408240-001	BRACKET	1		UT
	57	E309144-001	FASTNER	1		BS
		E309144-001	FASTNER	1		EF
		E309144-001	FASTNER	1		EN
		E309144-001	FASTNER	1		G
		E309144-001	FASTNER	1		US
	58	SBSG3008Z	SCREW	3		U
	58	SBSG3008Z	SCREW	3		UT
	-	E61029-005	NUMBER LABEL	1		
	-.	E406507-001	CAUTION LABEL	1		
	-	E70891-001	CLASS 1 LABEL	1		
	-	QZL1007-001	BEAB LABEL	1		BS
	-	E70419-003F	MARK LABEL	1		G
	-	QZL1031-101	LABEL	1		EF
	-	E70027-001	LABEL	1		EN
	-	E408271-001	LABEL	1		U
	-	E408271-001	LABEL	1		UT

⚠ : Safety Parts

The Marks for Designated Areas

BS .... the U.K.
G ..... Germany
UT .... Taiwan
EF ..... Continental Europe
U ..... Universal Type
No mark indicates all area.
EN .... Scandinavia
US ..... Singapore

CD Mechansim Ass'y and Parts List

Symbol No. M 2 M M

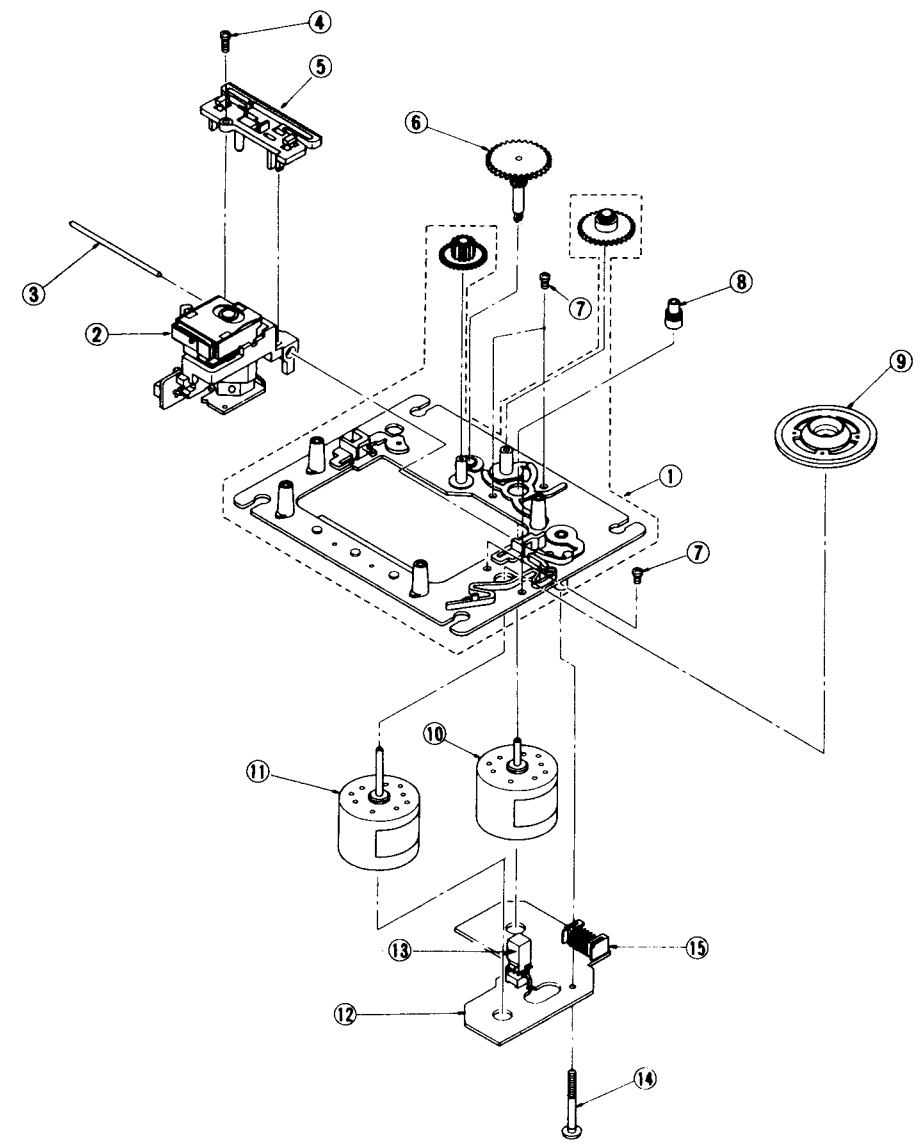

■ Parts List (CD Mechanism Ass'y)

Symbol No. M 2 M M

Item	Part Number	Part Name	Q'ty	Description	Area
1	EPB-002A	MECHANISM BASE ASSY	1		
2	OPTIMA-6S	PICK UP ASSY	1		
3	E406777-0001	SHAFT	1		
4	SDSF2006Z	SCREW	1		
5	E307746-001	CD RACK	1		
6	EPB-003A	MECHANISM BASE ASSY	1		
7	SDSP2003N	SCREW	4		
8	E406750-001	PINION GEAR	1		
9	EPB-001C	TURN TABLE	1		
10	E406784-001	DC MOTOR	1		
11	E406783-001	DC MOTOR	1		
12	EMW10190-001(S)	CIRCUIT BOARD	1		
13	ESB1100-005	LEAF SWITCH	1		
14	E75832-001	SPECIAL SCREW	1		
15	EMV5109-006B	PLUG ASSY	1	6PIN	

Changer Mechansim Ass'y and Parts List

Symbol No. M 3 M M

Grease
G-31KB:EBS0006-013B
G334:EBS0006-009B

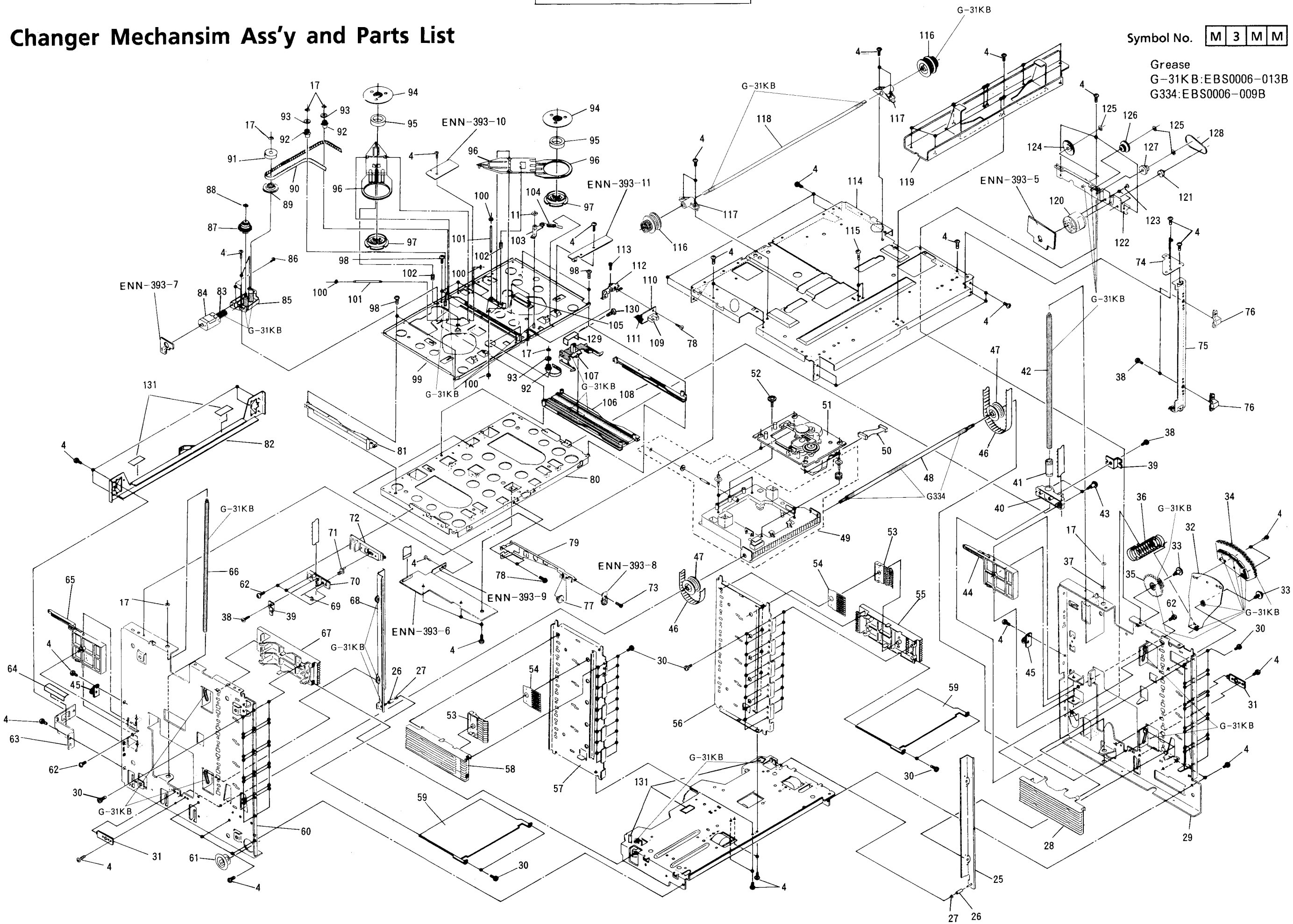

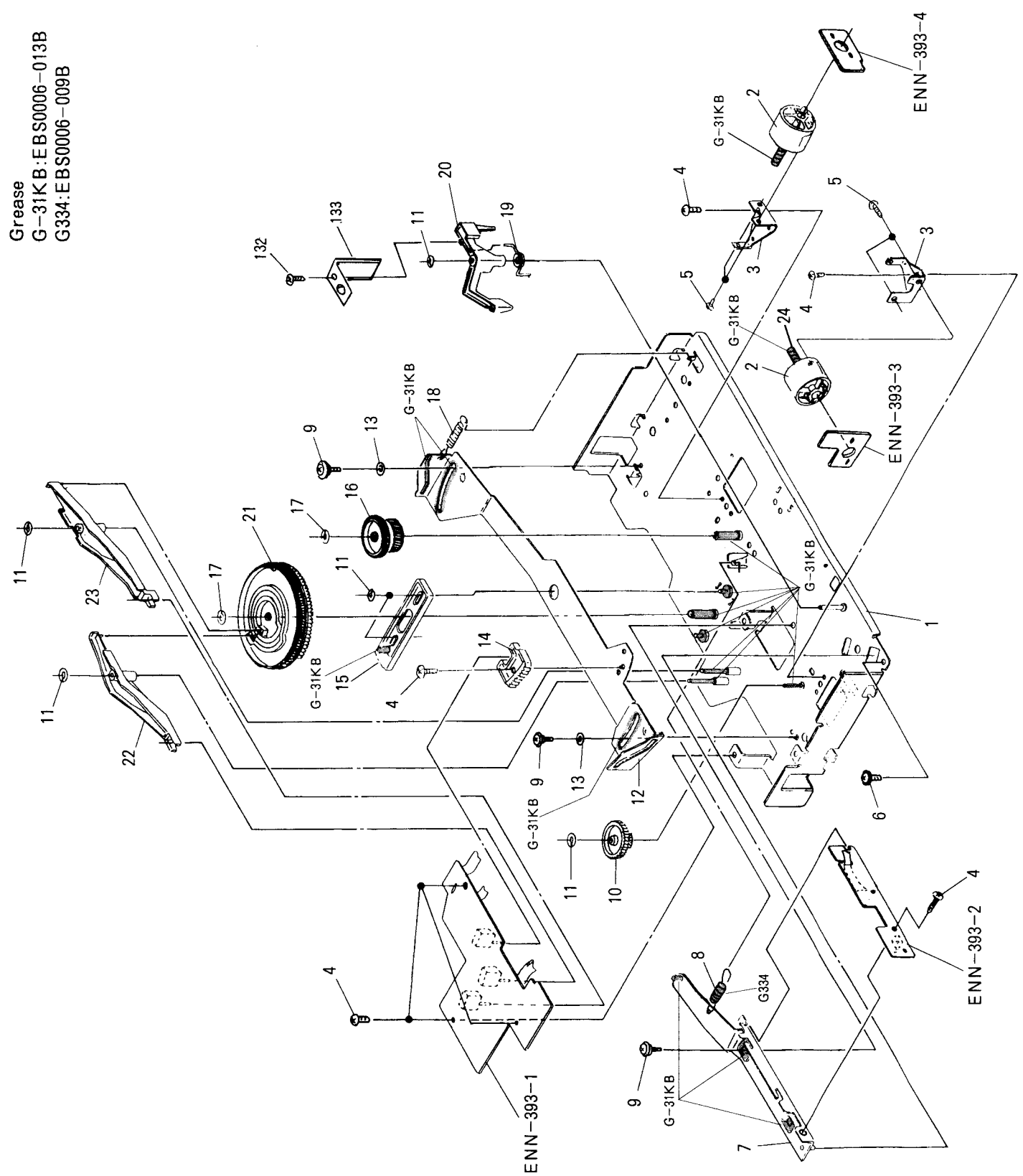

■ Parts List (Changer Mechanism Ass'y)

Symbol No. M 3 M M

Item	Part Number	Part Name	Q'ty	Description	Areas
1	E207894-003	MECHA BASE ASSY	1		
2	RF-500TB-12560	MOTOR	2		
3	E407647-001	MOTOR BRACKET	2		
4	SBST2606Z	SCREW	65		
5	SPSK2625Z	SCREW	4		
6	GBST3006Z	SCREW	1		
7	E308585-001	LINK ASSY	1		
8	E407706-009	SPRING	1		
9	E74727-006	SPECIAL SCREW	3		
10	E407675-001	CAM GEAR	1		
11	WDL216035-2	WASHER	7		
12	E207901-002	TRAY STOPPER LINK	1		
13	Q03093-836	WASHER	2		
14	E308592-001	SUB RACK	1		
15	E407679-002	LOCK BRACKET	1		
16	E308600-001	WHEEL GEAR	1		
17	WDL418050	WASHER	8		
18	E407706-008	SPRING	1		
19	E407708-004	TORSION SPRING	1		
20	E308607-003	DOOR SWITCH LEVER	1		
21	E207908-001	MAIN GEAR	1		
22	E308597-001	SWITCH LEVER (D)	1		
23	E308598-001	SWITCH LEVER (P)	1		
24	E407224-001	WORM GEAR	1		
25	E308579-002	TRAY STOPPER ASSY	1	RIGHT	
26	E407999-001	ROLLER (B)	2		
27	WDL123025-4	SLIT WASHAR	2		
28	E207905-002	RAIL (4)	5		
29	E102738-003	SIDE PANEL	1	RIGHT	
30	SDSF2606M	SCREW	60		
31	E407652-001	SHAFT STOPPER	2		
32	E308885-001	ARM ASSY	1		
33	E75871-002	SCREW	2		
34	E308604-002	GEAR (E)	1		
35	E308603-001	GEAR (D)	1		
36	E407706-007	SPRING	1		
37	E408009-001	WASHER	1		
38	SBSF2606Z	SCREW	4		
39	E407655-001	BELT LOCK BRACKET	2		
40	E308599-002	SHAFT GUIDE	1	RIGHT	
41	E407681-001	GUIDE BUSHING	1		
42	E407701-003	ELEVATOR SHAFT	1	RIGHT	
43	E407682-001	SPECIAL SCREW	2		
44	E308757-001	LOCK LEVER	1	RIGHT	
45	E68587-002	CIRCUIT BOARD BRACKET	2		
46	SB-236XL025UK	TIMING BELT	2		
47	E407673-002	TIMING GEAR ASSY	2		
48	E407704-002	ELEVATOR SHAFT	1		
49	SE12152-71	PICK-UP BASE ASSY	1		
50	EWS266-B410	SOCKET WIRE ASSY	1	6PIN	
51	------	TRAVERSE MECHANISM ASSY	1	SEE PAGE 2-6	
52	E65923-003	SCREW	1		
53	E308593-002	LOCK SPRING	10		
54	E407648-001	LEAF SPRING	10		
55	E207904-002	RAIL (3)	5		

Item	Part Number	Part Name	Q'ty	Description	Areas
56	E207896-003	CENTER PLATE	1	RIGHT	
57	E207895-003	CENTER PLATE	1	LEFT	
58	E207903-002	RAIL (2)	5		
59	E308591-002	TRAY BRACKET	10		
60	E102737-002	SIDE PANEL	1	LEFT	
61	E407709-001	ONE TOUCH BUSH	1		
62	SBST2610Z	SCREW	5		
63	E407846-001	STOPPER BRACKET	1		
64	E65778-005	SPACER	1		
65	E308756-001	LOCK LEVER	1	LEFT	
66	E407702-001	ELEVATOR SHAFT	1	LEFT	
67	E207902-002	RAIL (1)	5		
68	E308577-002	TRAY STOPPER ASSY	1	LEFT	
69	E407853-002	'E' WASHER	1		
70	E308606-001	BELT HOLDER	1	LEFT	
71	E407705-001	ECCENTRIC STUD	1		
72	E308605-001	SHAFT GUIDE	1	LEFT	
73	SPSP2006M	SCREW	1		
74	E407653-001	DOOR LOCK BRACKET	1		
75	E308584-004	DOOR LOCK BASE	1		
76	E407664-003	LOCK LEVER	2		
77	E407677-002	ROLLER	1		
78	SBST2004Z	SCREW	3		
79	E308583-002	LED BRACKET	1		
80	E207899-002	ELEVATOR BOTTOM PALTE	1		
81	E308595-002	ELEVATOR RAIL	1	LEFT	
82	E207900-003	REAR BRACKET	1		
83	E407224-001	WORM GEAR	1		
84	E407951-001	MOTOR ASSY	1		
85	E407893-001	MOTOR BRACKET ASSY	1		
86	SPSK2025Z	SCREW	2		
87	E407666-002	WORM WHEEL	1		
88	WDL316035-2	WASHER	1		
89	E407892-001	TIMING GEAR (C)	1		
90	SB-270TN15-3K	TIMING BELT	1		
91	E407920-002	FLANGE	1		
92	E407667-001	TIMING GEAR	3		
93	E407668-001	FLANGE	3		
94	E306836-003	YOKE PLATE	2		
95	E74897-002	MAGNET	1		
96	E308581-003	CLAMPER BRACKET ASSY	2		
97	E306835-331	CLAMPER	2		
98	SBST2614Z	SCREW	8		
99	E207897-002	ELEVATOR UPPER PALTE ASSY	1		
100	WDL214035-2	WASHER	4		
101	E407699-001	SHAFT 1	2		
102	E407707-001	SPRING	2		
103	E407669-001	SWITCH LEVER	1		
104	E407706-001	SPRING	1		
105	E407658-001	LEAF SPRING	1		
106	E207906-002	ELEVATOR RAIL	1	CENTER	
107	E308596-003	HOOK	1		
108	E308594-001	ELEVATOR RAIL	1	RIGHT	
109	GP1A53HR	PHOTO INTERRUPTER	1	PH804	
110	EMW20022-002	PRINTED BOARD	1		

Item	Part Number	Part Name	Q'ty	Description	Areas
111	EWS266-A208	SOCKET WIRE ASSY	1	BC874	
112	E308590-002	SENSOR BRACKET	1		
113	SPSP2016Z	WOOD SCREW	1		
114	E102739-003	UPPER BRACKET	1		
115	SBST2604N	SCREW	2		
116	E407673-003	TIMING GEAR ASSY	2		
117	E407671-001	SHAFT BUSHING	2		
118	E407703-002	GEAR SHAFT (U)	1		
119	E208026-001	TOP BRACKET	1		
120	RF-370CA-17315	DC MOTOR	1		
121	E72376-001	MOTOR PULLEY	1		
122	E308588-002	GEAR BASE ASSY	1		
123	SDSP3003Z	SCREW	2		
124	E407670-001	GEAR (B)	1		
125	WDL417050	WASHER	3		
126	E407676-001	GEAR (C)	1		
127	E75985-001	GEAR (1)	1		
128	E75950-002	BELT	1		
129	E408105-001	TIMING BELT LOCK BRACKET	1		
130	SDSF2004Z	SCREW	1		
131	E306805-125	SPACER	5		
132	SBSF2606Z	SCREW	1		
133	E408161-001	L.SPRING	1		

Printed Circuit Board Ass'y and Parts List

■ ENN-392 □ Main PC Board Ass'y

Note : ENN-392 □ varies according to the areas employed.See note (1) when placing an order.

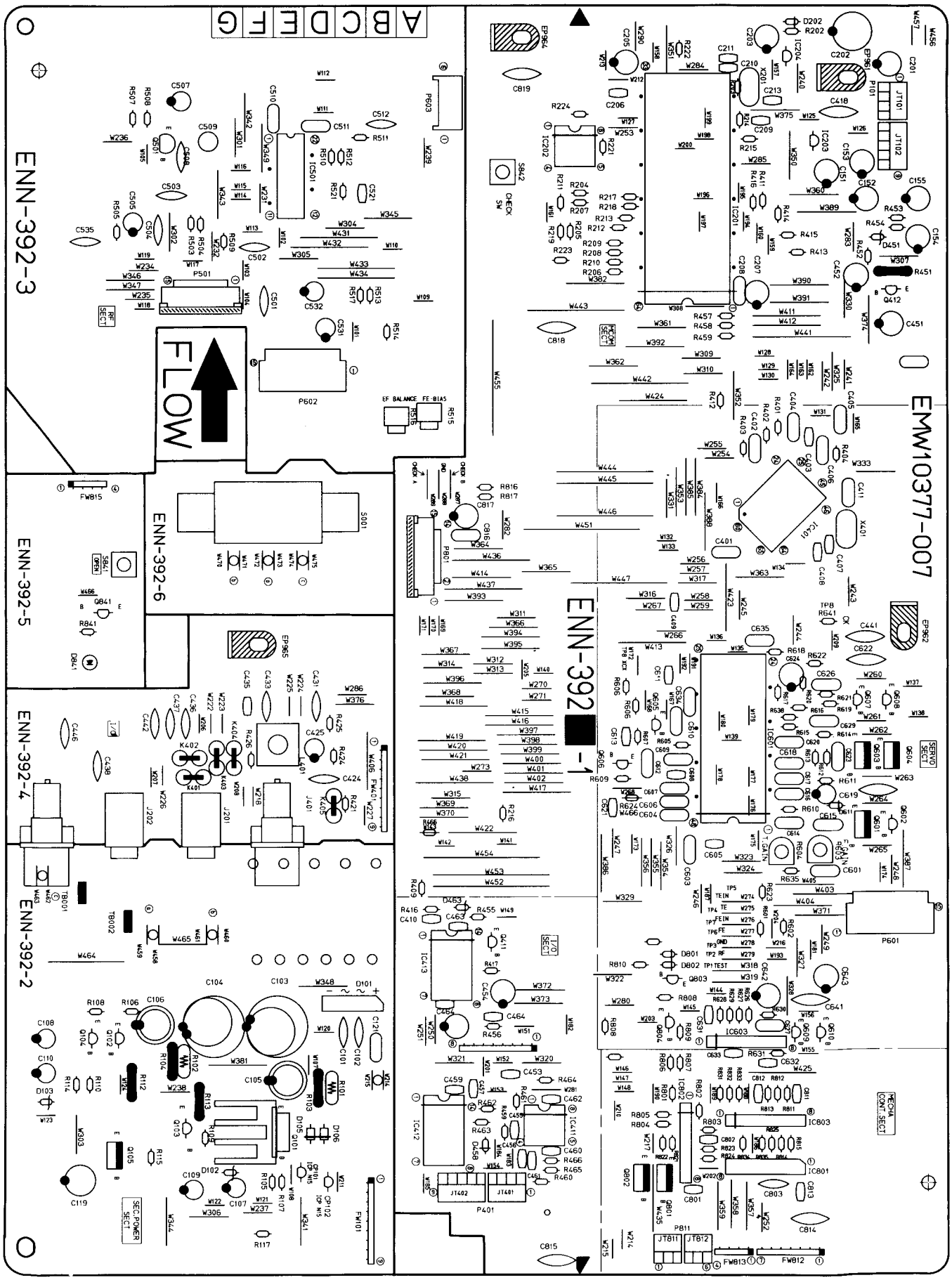

Note (1)

PC Board Ass'y	Version	Dasignated Areas
ENN-392 D	U UT	Universal Type Taiwan
ENN-392 E	EF EN US	Continental Europe Scandinavia Singapore
ENN-392 F BS	BS	the U.K.
ENN-392 G	G	Germany

TRANSISTORS

⚠	ITEM	PART NUMBER	DESCRIPTION	AREA
	Q101	2SB1187(E,F)	SILICON	
	Q102	2SC2060(Q,R)	SI.TRANSIST ROHM	
	Q103	2SD1302(S,T)	SILICON	
	Q104	2SA933S(RS)	SI.TRANSIST	
	Q105	2SB1357(E,F)	SI.TRANSIST ROHM	
	Q106	2SD2037(E,F)	SI.TRANSIST ROHM	
	Q501	2SA934(Q,R)	SI.TRANSIST ROHM	
	Q601	2SD2037(E,F)	SI.TRANSIST ROHM	
	Q602	2SA934(Q,R)	SI.TRANSIST ROHM	
	Q603	2SD2037(E,F)	SI.TRANSIST ROHM	
	Q604	2SB1357(E,F)	SI.TRANSIST ROHM	
	Q605	DTC144ES	DIGITAL TRA ROHM	
	Q606	2SC1740S(R,S)	SI.TRANSIST ROHM	
	Q607	2SC2060(Q,R)	SI.TRANSIST ROHM	
	Q608	2SA934(Q,R)	SI.TRANSIST ROHM	
	Q609	2SC2060(Q,R)	SI.TRANSIST ROHM	
	Q610	2SA934(Q,R)	SI.TRANSIST ROHM	
	Q801	2SD2037(E,F)	SI.TRANSIST ROHM	
	Q802	2SB1357(E,F)	SI.TRANSIST ROHM	
	Q841	DTC144ES	DIGITAL TRA ROHM	

I. C. S.

⚠	ITEM	PART NUMBER	DESCRIPTION	AREA
	IC201	M38022M4-140SP	I.C(MICRO-C MITSUBISHI	
	IC202	AT24C16P	I.C(M) MITSUBISHI	
	IC203	MN1281(Q)	I.C(DIGI-MO MATSUSHITA	
	IC204	MN1281(P,Q)	I.C(DIGI-MO MATSUSHITA	
	IC401	CXD2500BQ	I.C(DIGI-MO	
	IC411	SN75451BP	I.C(MONO-AN	
	IC412	HD74LS05P	I.C.	
	IC413	TC74HC125AP	I.C(DIGI-MO TOSHIBA	
	IC501	CXA1571S	I.C(MONO-AN	
	IC601	CXA1372S	I.C(MONO-AN	
	IC603	M5218AL	I.C(MONO-AN MITSUBISHI	
	IC801	STA341M(A)	TRANSISTOR	
	IC802	M5218AL	I.C(MONO-AN MITSUBISHI	
	IC803	M5218AL	I.C(MONO-AN MITSUBISHI	

DIODES

⚠	ITEM	PART NUMBER	DESCRIPTION	AREA
⚠	D101	S1VB20F	SI.DIODE SINDENGEN	
	D102	MTZ5.6JB	ZENER DIODE ROHM	
	D103	MTZ5.6JB	ZENER DIODE ROHM	
	D105	1SR139-200	SI.DIODE ROHM	
	D106	1SR139-200	SI.DIODE ROHM	
	D202	1SS133	SI.DIODE ROHM	
	D458	1SS133	SI.DIODE ROHM	
	D463	MTZ3.3JB	ZENER DIODE ROHM	
	D841	SLA-380LT	L.E.D. ROHM	BS
	D841	SLR-342VC3F	L.E.D. ROHM	EF
	D841	SLR-342VC3F	L.E.D. ROHM	EN
	D841	SLR-342VC3F	L.E.D. ROHM	G
	D841	SLR-342VC3F	L.E.D. ROHM	U
	D841	SLR-342VC3F	L.E.D. ROHM	US
	D841	SLR-342VC3F	L.E.D. ROHM	UT

⚠ : SAFETY PARTS

CAPACITORS

⚠	ITEM	PART NUMBER	DESCRIPTION	AREA
	C101	QFV81HJ-104	0.1MF 50V THIN FILM	
	C102	QFV81HJ-104	0.1MF 50V THIN FILM	
	C103	QETB1CM-478E	4700MF 16V E.CAPACITO	
	C104	QETB1CM-228M	2200MF 16V E.CAPACITO	
	C105	QETB1CM-227	220MF 16V AL E.CAPAC	
	C106	QETB1CM-227	220MF 16V AL E.CAPAC	
	C107	QETB1HM-225	2.2MF 50V E.CAPACITO	
	C108	QETB1HM-225	2.2MF 50V E.CAPACITO	
	C109	QETB1AM-227	220MF 10V E.CAPACITO	
	C110	QETB1AM-476	47MF 10V E.CAPACITO	
	C119	QETBOJM-477	470MF 6.3V AL E.CAPAC	
	C151	QETB1AM-227	220MF 10V E.CAPACITO	
	C152	QETB1AM-227	220MF 10V E.CAPACITO	
	C153	QETB1AM-227	220MF 10V E.CAPACITO	
	C154	QETB1EM-227	220MF 25V AL E.CAPAC	
	C155	QETB1EM-227	220MF 25V AL E.CAPAC	
	C201	QETB1AM-477	470MF 10V E.CAPACITO	
	C202	QETB1AM-108	1000MF 10V E.CAPACITO	
	C203	QETB1EM-106	10MF 25V AL E.CAPAC	
	C205	QETB1EM-106	10MF 25V AL E.CAPAC	
	C206	QCHB1EZ-223	0.022MF 25V CER.CAPACI	
	C207	QETB1EM-106	10MF 25V AL E.CAPAC	
	C208	QCZ0205-155	1.5MF 25V C.CAPACITO	
	C209	QCBB1HK-101Y	100PF 50V CER.CAPACI	
	C210	QCT30CH-100Y	10PF 50V CER.CAPACI	
	C211	QCT30CH-100Y	10PF 50V CER.CAPACI	
	C213	QCBB1HK-101Y	100PF 50V CER.CAPACI	
	C401	QCZ0205-155	1.5MF 25V C.CAPACITO	
	C402	QFN81HJ-473	0.047MF 50V METAL.MYLA	
	C403	QCHB1EZ-223	0.022MF 25V CER.CAPACI	
	C404	QFN81HJ-152	1500PF 50V METAL.MYLA	
	C405	QFN81HJ-102	1000PF 50V METAL.MYLA	
	C406	QCZ0205-155	1.5MF 25V C.CAPACITO	
	C407	QCT30CH-6R8	6.8PF 50V CERAMIC	
	C408	QCT30CH-160	16PF 50V CERAMIC	
	C410	QCSB1HJ-680	68PF 50V CER.CAPACI	
	C418	QCF21HP-223A	0.022MF 50V CER.CAPACI	
	C425	QETB1CM-476	47MF 16V AL E.CAPAC	
	C431	QCS21HJ-330	33PF 50V CER.CAPACI	
	C433	QCS21HJ-5R0	5PF 50V CER.CAPACI	
	C435	QCHB1EZ-223	0.022MF 25V CER.CAPACI	
	C441	QCY31HK-472Z	4700PF 50V CER.CAPACI	
	C442	QCF21HP-223A	0.022MF 50V CER.CAPACI	
	C457	QCBB1HK-101Y	100PF 50V CER.CAPACI	
	C459	QCHB1EZ-223	0.022MF 25V CER.CAPACI	
	C462	QCHB1EZ-223	0.022MF 25V CER.CAPACI	
	C463	QCHB1EZ-223	0.022MF 25V CER.CAPACI	
	C464	QCSB1HJ-680	68PF 50V CER.CAPACI	
	C501	QCS21HJ-100	10PF 50V CER.CAPACI	
	C502	QCS21HJ-100	10PF 50V CER.CAPACI	
	C503	QCS21HJ-101A	100PF 50V CER.CAPACI	
	C504	QCS21HJ-820	82PF 50V CER.CAPACI	
	C505	QETB1AM-476	47MF 10V E.CAPACITO	
	C507	QETB1AM-107	100MF 10V AL E.CAPAC	
	C508	QCY21HK-102	1000PF 50V CER.CAPACI	
	C509	QEN51HM-105	1MF 50V NON POLE	
	C510	QCZ0205-155	1.5MF 25V C.CAPACITO	
	C511	QCZ0205-155	1.5MF 25V C.CAPACITO	
	C512	QCS21HJ-220	22PF 50V CER.CAPACI	
	C521	QCHB1EZ-223	0.022MF 25V CER.CAPACI	
	C531	QETB1AM-107	100MF 10V AL E.CAPAC	
	C532	QETB1AM-107	100MF 10V AL E.CAPAC	
	C535	QCS21HJ-180A	18PF 50V CER.CAPACI	
	C601	QFN81HJ-182	1800PF 50V METAL.MYLA	
	C603	QFN81HJ-222	2200PF 50V METAL.MYLA	
	C604	QFN81HJ-222	2200PF 50V METAL.MYLA	
	C605	QCHB1EZ-223	0.022MF 25V CER.CAPACI	
	C606	QFN81HJ-333	0.033MF 50V MYLAR CAPA	
	C607	QFN81HJ-103	0.01MF 50V METAL.MYLA	
	C608	QCHB1EZ-223	0.022MF 25V CER.CAPACI	
	C609	QFN81HJ-333	0.033MF 50V MYLAR CAPA	
	C610	QCZ0205-155	1.5MF 25V C.CAPACITO	
	C611	QCHB1EZ-223	0.022MF 25V CER.CAPACI	
	C612	QFV81HJ-104	0.1MF 50V THIN FILM	
	C613	QCBB1HK-471Y	470PF 50V CER.CAPACI	
	C614	QFN81HJ-104	0.1MF 50V METAL.MYLA	
	C615	QFN81HJ-333	0.033MF 50V MYLAR CAPA	
	C616	QFV81HJ-473	0.047MF 50V THIN FILM	
	C617	QFV81HJ-473	0.047MF 50V THIN FILM	
	C618	QFV81HJ-473	0.047MF 50V THIN FILM	
	C619	QETB1EM-106	10MF 25V AL E.CAPAC	
	C620	QFN81HJ-104	0.1MF 50V METAL.MYLA	
	C622	QCF21HP-223A	0.022MF 50V CER.CAPACI	
	C623	QFN81HJ-333	0.033MF 50V MYLAR CAPA	
	C624	QETB1EM-106	10MF 25V AL E.CAPAC	
	C626	QFN81HJ-183	0.018MF 50V METAL.MYLA	
	C627	QFN81HJ-103	0.01MF 50V METAL.MYLA	
	C629	QFN81HJ-393	0.039MF 50V METAL.MYLA	
	C632	QCHB1EZ-223	0.022MF 25V CER.CAPACI	
	C633	QCHB1EZ-223	0.022MF 25V CER.CAPACI	
	C641	QCF21HP-223A	0.022MF 50V CER.CAPACI	
	C801	QCHB1EZ-223	0.022MF 25V CER.CAPACI	
	C802	QCHB1EZ-223	0.022MF 25V CER.CAPACI	
	C803	QCF21HP-103A	0.01MF 50V CER.CAPACI	
	C811	QCHB1EZ-223	0.022MF 25V CER.CAPACI	
	C812	QCHB1EZ-223	0.022MF 25V CER.CAPACI	

⚠ : SAFETY PARTS

RESISTORS

⚠	ITEM	PART NUMBER	DESCRIPTION			AREA
⚠	R101	PTH61G30BD2R2N			FUSIBLE RE	
⚠	R102	PTH61G30BD2R2N			FUSIBLE RE	
	R105	QRD161J-222	2.2K	1/6W	CARBON RES	
	R106	QRD161J-222	2.2K	1/6W	CARBON RES	
	R107	QRD161J-221	220	1/6W	CARBON RES	
	R108	QRD161J-221	220	1/6W	CARBON RES	
	R109	QRD161J-221	220	1/6W	CARBON RES	
	R110	QRD161J-221	220	1/6W	CARBON RES	
⚠	R112	QRZ0077-100	10	1/4W	FUSIBLE RE	
⚠	R113	QRD14CJ-102S	1K	1/4W	UNF.CARBON	
	R114	QRD161J-821	820	1/6W	CARBON RES	
	R115	QRD167J-102	1K	1/6W	CARBON RES	
	R117	QRD167J-102	1K	1/6W	CARBON RES	
	R201	QRD161J-470	47	1/6W	CARBON RES	
	R202	QRD161J-821	820	1/6W	CARBON RES	
	R203	QRD161J-105	1M	1/6W	CARBON RES	
	R204	QRD167J-223	22K	1/6W	CARBON RES	
	R205	QRD167J-223	22K	1/6W	CARBON RES	
	R206	QRD167J-223	22K	1/6W	CARBON RES	
	R207	QRD167J-223	22K	1/6W	CARBON RES	
	R208	QRD167J-223	22K	1/6W	CARBON RES	
	R209	QRD167J-223	22K	1/6W	CARBON RES	
	R210	QRD167J-223	22K	1/6W	CARBON RES	
	R211	QRD167J-223	22K	1/6W	CARBON RES	
	R212	QRD167J-223	22K	1/6W	CARBON RES	
	R213	QRD167J-223	22K	1/6W	CARBON RES	
	R214	QRD167J-223	22K	1/6W	CARBON RES	
	R215	QRD167J-223	22K	1/6W	CARBON RES	
	R216	QRD167J-223	22K	1/6W	CARBON RES	
	R217	QRD167J-223	22K	1/6W	CARBON RES	
	R218	QRD167J-223	22K	1/6W	CARBON RES	
	R219	QRD167J-223	22K	1/6W	CARBON RES	
	R221	QRD167J-223	22K	1/6W	CARBON RES	
	R222	QRD167J-223	22K	1/6W	CARBON RES	
	R223	QRD167J-223	22K	1/6W	CARBON RES	
	R224	QRD161J-103	10K	1/6W	CARBON RES	
	R401	QRD167J-682	6.8K	1/6W	CARBON RES	
	R402	QRD167J-332	3.3K	1/6W	CARBON RES	
	R403	QRD161J-103	10K	1/6W	CARBON RES	
	R404	QRD167J-113	11K	1/6W	CARBON RES	
	R409	QRD161J-681	680	1/6W	CARBON RES	
	R411	QRD161J-103	10K	1/6W	CARBON RES	
	R412	QRD161J-103	10K	1/6W	CARBON RES	
	R413	QRD161J-103	10K	1/6W	CARBON RES	
	R414	QRD161J-103	10K	1/6W	CARBON RES	
	R415	QRD161J-103	10K	1/6W	CARBON RES	
	R416	QRD167J-102	1K	1/6W	CARBON RES	
	R417	QRD161J-101	100	1/6W	CARBON RES	
	R424	QRD161J-910Y	91	1/6W	CARBON RES	
	R425	QRD161J-100	10	1/6W	CARBON RES	
	R426	QRD161J-750	75	1/6W	CARBON RES	
	R455	QRD161J-472	4.7K	1/6W	CARBON RES	
	R457	QRD161J-103	10K	1/6W	CARBON RES	
	R459	QRD161J-103	10K	1/6W	CARBON RES	
	R460	QRD167J-151	150	1/6W	CARBON RES	
	R461	QRD167J-151	150	1/6W	CARBON RES	
	R462	QRD161J-221	220	1/6W	CARBON RES	
	R463	QRD161J-472	4.7K	1/6W	CARBON RES	
	R464	QRD161J-472	4.7K	1/6W	CARBON RES	
	R465	QRD167J-151	150	1/6W	CARBON RES	
	R466	QRD167J-223	22K	1/6W	CARBON RES	
	R503	QRD161J-183	18K	1/6W	CARBON RES	
	R504	QRD161J-183	18K	1/6W	CARBON RES	
	R505	QRD167J-121	120	1/6W	CARBON RES	
	R507	QRD161J-100	10	1/6W	CARBON RES	
	R508	QRD167J-120	12	1/6W	CARBON	
	R509	QRD161J-910Y	91	1/6W	CARBON RES	
	R510	QRD161J-103	10K	1/6W	CARBON RES	
	R511	QRD167J-332	3.3K	1/6W	CARBON RES	
	R512	QRD167J-822	8.2K	1/6W	CARBON RES	
	R513	QRD167J-113	11K	1/6W	CARBON RES	
	R514	QRD161J-104	100K	1/6W	CARBON RES	
	R515	QVPA603-203M	20K		TRIMMER RE	
	R516	QVPA603-203M	20K		TRIMMER RE	
	R517	QRD161J-103	10K	1/6W	CARBON RES	
	R521	QRD167J-102	1K	1/6W	CARBON RES	
	R601	QRD161J-472	4.7K	1/6W	CARBON RES	
	R602	QRD161J-472	4.7K	1/6W	CARBON RES	
	R603	QVPA601-203A	20K		VARIABLE R	
	R604	QVPA601-203A	20K		VARIABLE R	
	R605	QRD167J-102	1K	1/6W	CARBON RES	
	R606	QRD161J-104	100K	1/6W	CARBON RES	
	R607	QRD161J-103	10K	1/6W	CARBON RES	
	R608	QRD161J-183	18K	1/6W	CARBON RES	
	R609	QRD161J-183	18K	1/6W	CARBON RES	
	R610	QRD161J-224	220K	1/6W	CARBON RES	
	R611	QRD161J-2R2	2.2	1/6W	CARBON RES	
	R612	QRD161J-164YT	160K	1/6W	CARBON RES	
	R613	QRD167J-134	130K	1/6W	CARBON RES	
	R614	QRD161J-2R2	2.2	1/6W	CARBON RES	
	R615	QRD161J-224	220K	1/6W	CARBON RES	
	R616	QRD161J-333	33K	1/6W	CARBON RES	
	R617	QRD161J-103	10K	1/6W	CARBON RES	
	R618	QRD167J-514	510K	1/6W	CARBON RES	
	R619	QRD161J-2R2	2.2	1/6W	CARBON RES	
	R620	QRD167J-153	15K	1/6W	CARBON RES	
	R621	QRD161J-393	39K	1/6W	CARBON RES	
	R622	QRD161J-124	120K	1/6W	CARBON RES	
	R623	QRD161J-472	4.7K	1/6W	CARBON RES	
	R626	QRD161J-203	20K	1/6W	CARBON RES	

⚠ : SAFETY PARTS

RESISTORS

⚠	ITEM	PART NUMBER	DESCRIPTION			AREA
	R627	QRD161J-273	27K	1/6W	CARBON RES	
	R628	QRD161J-752	7.5K	1/6W	CARBON RES	
	R629	QRD161J-752	7.5K	1/6W	CARBON RES	
	R630	QRD161J-333	33K	1/6W	CARBON RES	
	R631	QRD161J-2R2	2.2	1/6W	CARBON RES	
	R635	QRD161J-475	4.7M	1/6W	CARBON RES	
	R638	QRD161J-823	82K	1/6W	CARBON RES	
	R641	QRD167J-102	1K	1/6W	CARBON RES	
	R801	QRD161J-203	20K	1/6W	CARBON RES	
	R802	QRD161J-203	20K	1/6W	CARBON RES	
	R801	QRD161J-203	20K	1/6W	CARBON RES	
	R802	QRD161J-203	20K	1/6W	CARBON RES	
	R803	QRD161J-823	82K	1/6W	CARBON RES	
	R804	QRD161J-823	82K	1/6W	CARBON RES	
	R805	QRD161J-2R2	2.2	1/6W	CARBON RES	
	R803	QRD161J-823	82K	1/6W	CARBON RES	
	R804	QRD161J-823	82K	1/6W	CARBON RES	
	R805	QRD161J-2R2	2.2	1/6W	CARBON RES	
	R806	QRD161J-333	33K	1/6W	CARBON RES	
	R807	QRD161J-333	33K	1/6W	CARBON RES	
	R808	QRD161J-103	10K	1/6W	CARBON RES	
	R811	QRD167J-223	22K	1/6W	CARBON RES	
	R812	QRD167J-223	22K	1/6W	CARBON RES	
	R813	QRD161J-273	27K	1/6W	CARBON RES	
	R814	QRD161J-273	27K	1/6W	CARBON RES	
	R815	QRD161J-2R2	2.2	1/6W	CARBON RES	
	R816	QRD161J-103	10K	1/6W	CARBON RES	
	R817	QRD161J-103	10K	1/6W	CARBON RES	
	R821	QRD161J-243	24K	1/6W	CARBON RES	
	R822	QRD161J-243	24K	1/6W	CARBON RES	
	R823	QRD161J-333	33K	1/6W	CARBON RES	
	R824	QRD161J-333	33K	1/6W	CARBON RES	
	R825	QRD161J-2R2	2.2	1/6W	CARBON RES	
	R831	QRD167J-223	22K	1/6W	CARBON RES	
	R832	QRD167J-223	22K	1/6W	CARBON RES	
	R833	QRD167J-223	22K	1/6W	CARBON RES	
	R834	QRD167J-223	22K	1/6W	CARBON RES	
	R835	QRD161J-2R2	2.2	1/6W	CARBON RES	
	R841	QRD161J-331	330	1/6W	CARBON RES	

OTHERS

⚠	ITEM	PART NUMBER	DESCRIPTION	AREA
		E70945-H35	HEAT SINK	
		SBSE3008Z	SCREW	
		QWE889-15RR	VINYL WIRE	U
		QWE881-13RR	VINYL WIRE	U
		QWE883-17RR	PIN WIRE	U
		QWE889-15RR	VINYL WIRE	UT
		QWE881-13RR	VINYL WIRE	UT
		QWE883-17RR	PIN WIRE	UT
	J201	QMS3L25-020	EARPHONE JA	
	J401	EMB91YV-101A	ANTENNA TER	
	K403	ENZ8101-007	INDUCTOR	
	K404	ENZ8101-007	INDUCTOR	
	L401	ENZ3003-001	I.F.TRANSFO	
	P501	EMV7144-015R	CONNECT TER	
	P601	EMV7123-015R	MALE CONNEC	
	P602	EMV7123-015R	MALE CONNEC	
	P603	EMV5109-006B	CONNECT TER	
	P801	EMV7144-015R	CONNECT TER	
	P811	EMV7122-103	CONNECT TER	
	S001	QSS1L22-E01	SLIDE SWITC	U
	S001	QSS1L22-E01	SLIDE SWITC	UT
	S841	ESP0001-023M	TACT SWITCH	
	S842	ESP0001-023M	TACT SWITCH	
	X201	ECX0007-987KNTJ	CRYSTAL	
	X401	ECX0169-344EA	CRYSTAL	
⚠	CP101	ICP-N15	I.C.PROTECT	
⚠	CP102	ICP-N15	I.C.PROTECT	
	EP961	EMZ4002-001Z	EARTH PLATE	
	EP962	EMZ4002-001Z	EARTH PLATE	
	EP964	EMZ4002-001Z	EARTH PLATE	
	EP965	EMZ4002-001Z	EARTH PLATE	
	FW101	EWR39B-30LST	FLAT WIRE A	
	FW401	EWR39B-10LST	FLAT WIRE A	
	FW812	EWR37B-40LST	FLAT WIRE A	
	FW813	EWR34B-40LST	FLAT WIRE A	
	FW815	EWR34B-16LST	FLAT WIRE A	
	JT101	EMV7122-004	CONNECT TER	
	JT102	EMV7122-005	MALE CONNEC	
	JT401	EMV7122-004	CONNECT TER	
	JT402	EMV7122-005	MALE CONNEC	
	JT811	EMV7122-103	CONNECT TER	
	JT812	EMV7122-103	CONNECT TER	
	TB001	EMZ4001-001	TAB	
	TB002	EMZ4001-001	TAB	

⚠ : SAFETY PARTS

■ ENN-393 [A] Mecha Switch PC Board Ass'y

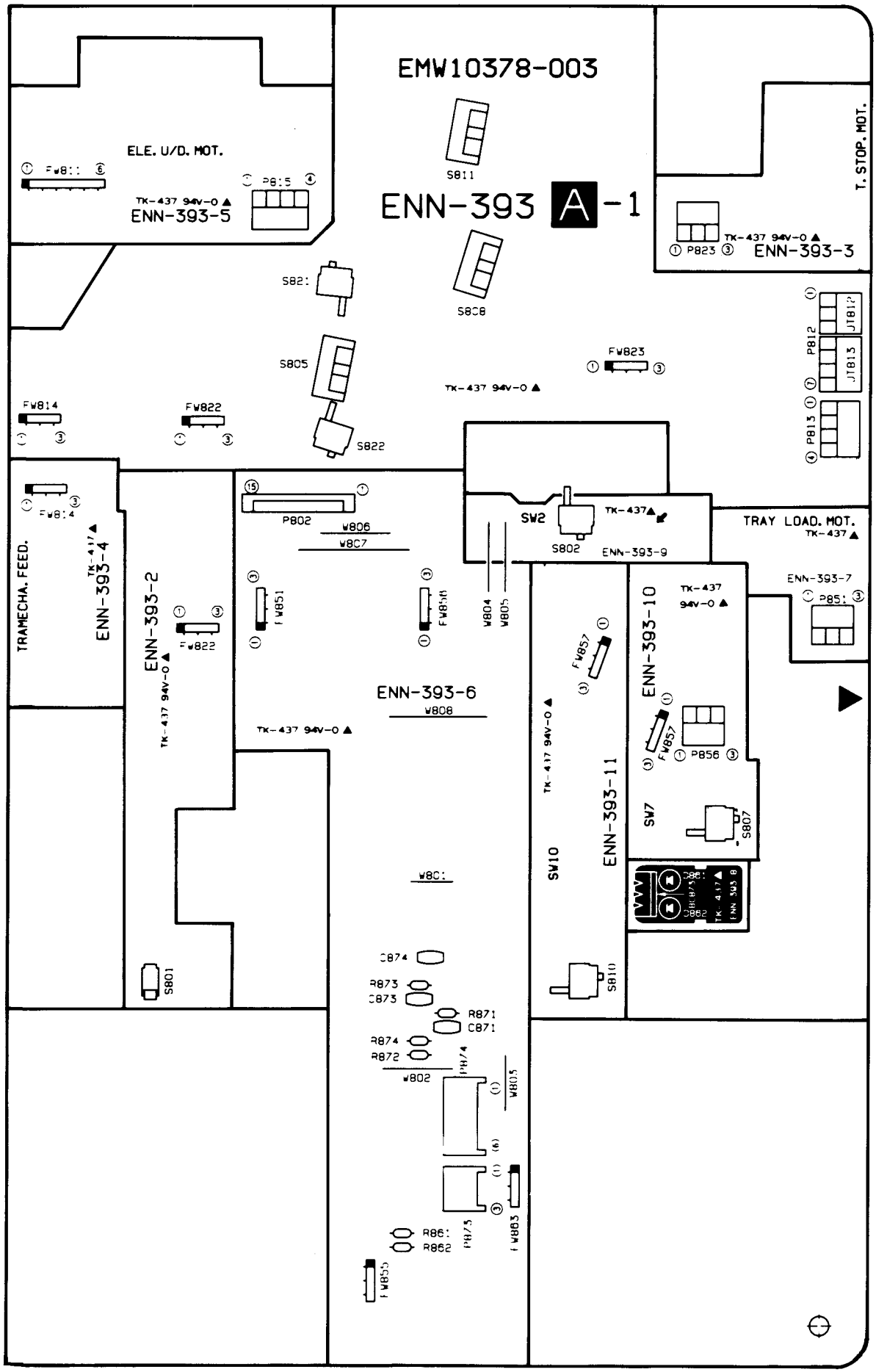

DIODES

⚠	ITEM	PART NUMBER	DESCRIPTION	AREA
	D861	SLA-380LTA47	L.E.D.	
	D862	SLA-380MTA47	L.E.D. ROHM	

CAPACITORS

⚠	ITEM	PART NUMBER	DESCRIPTION	AREA
	C871	QCHB1EZ-223	0.022MF 25V CER.CAPACI	TO
	C873	QCHB1EZ-223	0.022MF 25V CER.CAPACI	TO
	C874	QCHB1EZ-223	0.022MF 25V CER.CAPACI	TO

RESISTORS

⚠	ITEM	PART NUMBER	DESCRIPTION	AREA
	R861	QRD167J-331	330 1/6W CARBON RES	IS
	R862	QRD167J-331	330 1/6W CARBON	
	R871	QRD167J-472	4.7K 1/6W CARBON RES	IS
	R872	QRD167J-331	330 1/6W CARBON	
	R873	QRD167J-472	4.7K 1/6W CARBON RES	IS
	R874	QRD167J-331	330 1/6W CARBON	

⚠ : SAFETY PARTS

OTHERS

⚠	ITEM	PART NUMBER	DESCRIPTION	AREA
	P802	EMV7144-015	F.P.C.PLUG(15PIN)	
	P813	EMV7122-004	CONNECT TERMINAL(4PIN)	
	P815	EMV7122-004	CONNECT TERMINAL(4PIN)	
	P823	EMV7122-103	CONNECT TERMINAL(3PIN)	
	P851	EMV7122-103	CONNECT TERMINAL(3PIN)	
	P856	EMV7122-103	CONNECT TERMINAL(3PIN)	
	P873	EMV5109-003B	CONNECTOR(3PIN)	
	P874	EMV5109-006B	CONNECT TERMINAL(6PIN)	
	S801	QSM2001-E01	MICRO SWITCH	
	S802	QSP2K11-E04	PUSH SWITCH	
	S805	ESS1200-002	LEVER SWITCH	
	S807	QSP2K11-E04	PUSH SWITCH	
	S808	ESS1200-002	LEVER SWITCH	
	S810	QSP2K11-E04	PUSH SWITCH	
	S811	ESS1200-002	LEVER SWITCH	
	BC873	EWS263-F222	SOCKET WIRE ASSY(3PIN)	
	FW811	EWR36B-50LST	FLAT WIRE ASSY(6PIN)	
	FW814	EWR33B-10SST	FLAT WIRE ASSY(3PIN)	
	FW822	EWR33B-13SST	FLAT WIRE ASSY(3PIN)	
	FW823	EWR33B-08LST	FLAT WIRE ASSY(3PIN)	
	FW851	EWR33B-08LST	FLAT WIRE ASSY(3PIN)	
	FW856	EWR33B-10LST	FLAT WIRE ASSY(3PIN)	
	FW857	EWR33B-20SST	FLAT WIRE ASSY(3PIN)	
	JT812	EMV7122-103	CONNECT TERMINAL(3PIN)	
	JT813	EMV7122-004	CONNECT TERMINAL(4PIN)	

⚠ : SAFETY PARTS

Accessories

Symbol No. M 4 M M

⚠	Item	Part Number	Part Name	Q'ty	Description	Area
	1	E30580-2139ABS	INSTRUCTION BOOK	1		BS
		E30580-2140A	INSTRUCTION BOOK	1		EF
		E30580-2140A	INSTRUCTION BOOK	1		EN
		E30580-2140A	INSTRUCTION BOOK	1		G
		E30580-2141A	INSTRUCTION BOOK	1		U
		E30580-2141A	INSTRUCTION BOOK	1		US
		E30580-2141A	INSTRUCTION BOOK	1		UT
	2	RM-SXMC100U	REMOTE CONTROL UNIT	1		
	3	UM-3(DJ)-2PSA	BATTERY	1		
	4	EWP805-001	1P PLUG CORD	1		
	5	EWP805-010	PLUG CORD	1		
	6	EMZ2001-019	PLUG WIRE	1		
	7	QMP5520-1835BS	POWER CORD	1		BS
		QMP39F0-183	POWER CORD	1		EF
		QMP39F0-183	POWER CORD	1		EN
		QMP39F0-183	POWER CORD	1		G
		QMP7530-183	POWER CORD	1		U
		QMP39F0-183	POWER CORD	1		US
		QMP7530-183	POWER CORD	1		UT
	8	E300196-010B	ENVELOPE	1		
	9	EWP302-013K	SIGNAL CORD	1		
⚠	10	E04056	SIEMENS PLUG	2		U
⚠		E04056	SIEMENS PLUG	2		UT
	11	E43486-340A	SAFETY SHEET	1		BS
	12	BT20060	WARRANTY CARD	1		BS
	13	BT20066A	ECC AGENCY	1		BS
	14	BT-20134	WARRANTY CARD	1		
	15	E308809-001	C.D BOOKLET	1		
	16	E308801-001	SHEET	1		
	17	QPGA040-04305	ENVELOPE	1		

⚠ : Safety Parts

The Marks for Designated Areas

BS .... the U.K. EF ..... Continental Europe EN .... Scandinavia G ..... Germany
U ..... Universal Type US ..... Singapore UT .... Taiwan
No mark indicates all area.

Packing Materials and Part Numbers

Symbol No. M 5 M M

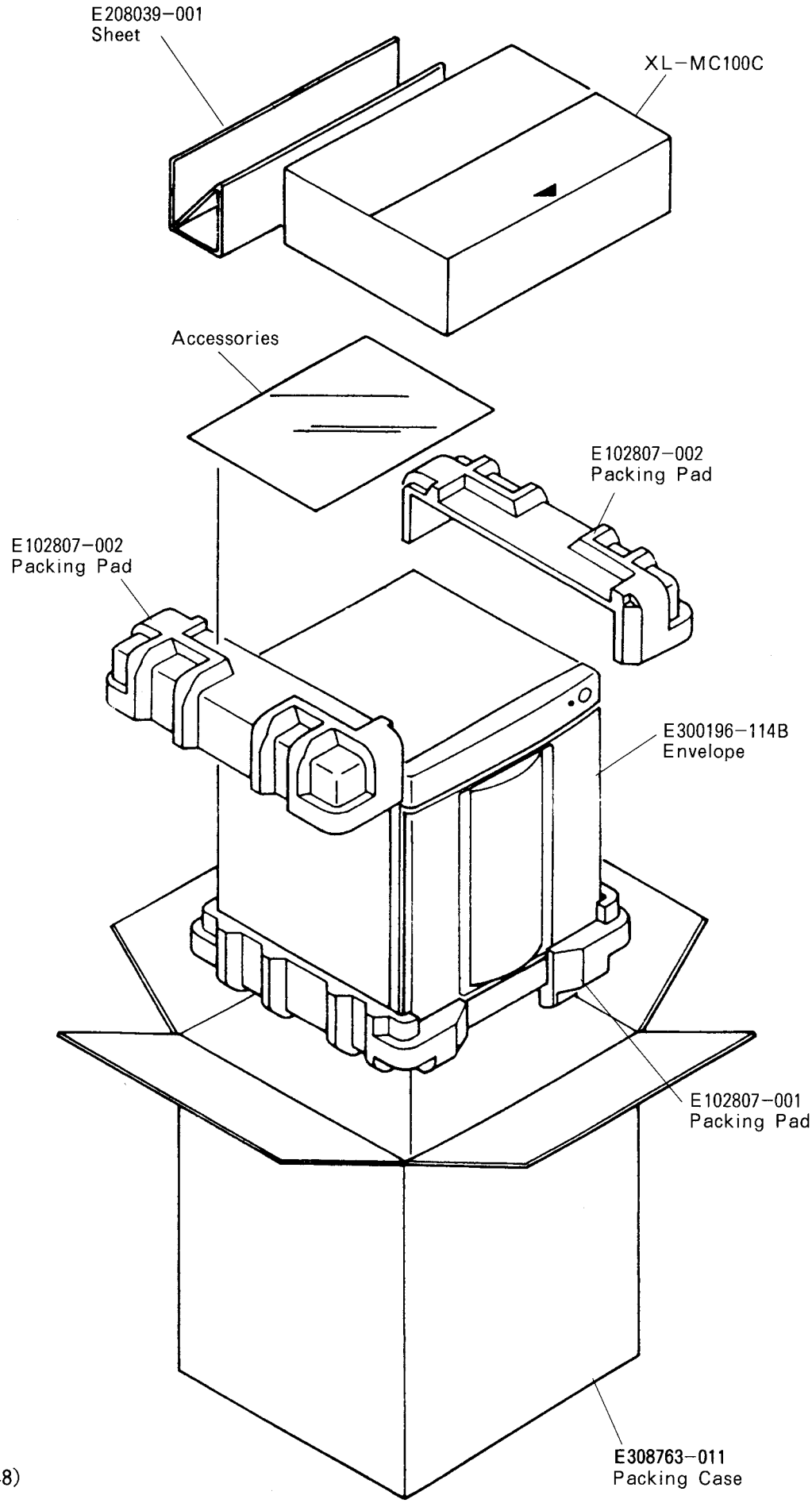

XL-MC100C

– Contents –

General Exploded View and Parts List 3-2
Printed Circuit Board Ass'y and Parts List 3-5
■ ENN-391 □ CD & Tuner PC Board Ass'y 3-5
Packing Materials and Part Numbers 3-11

General Exploded View and Parts List

Symbol No. M 6 M M

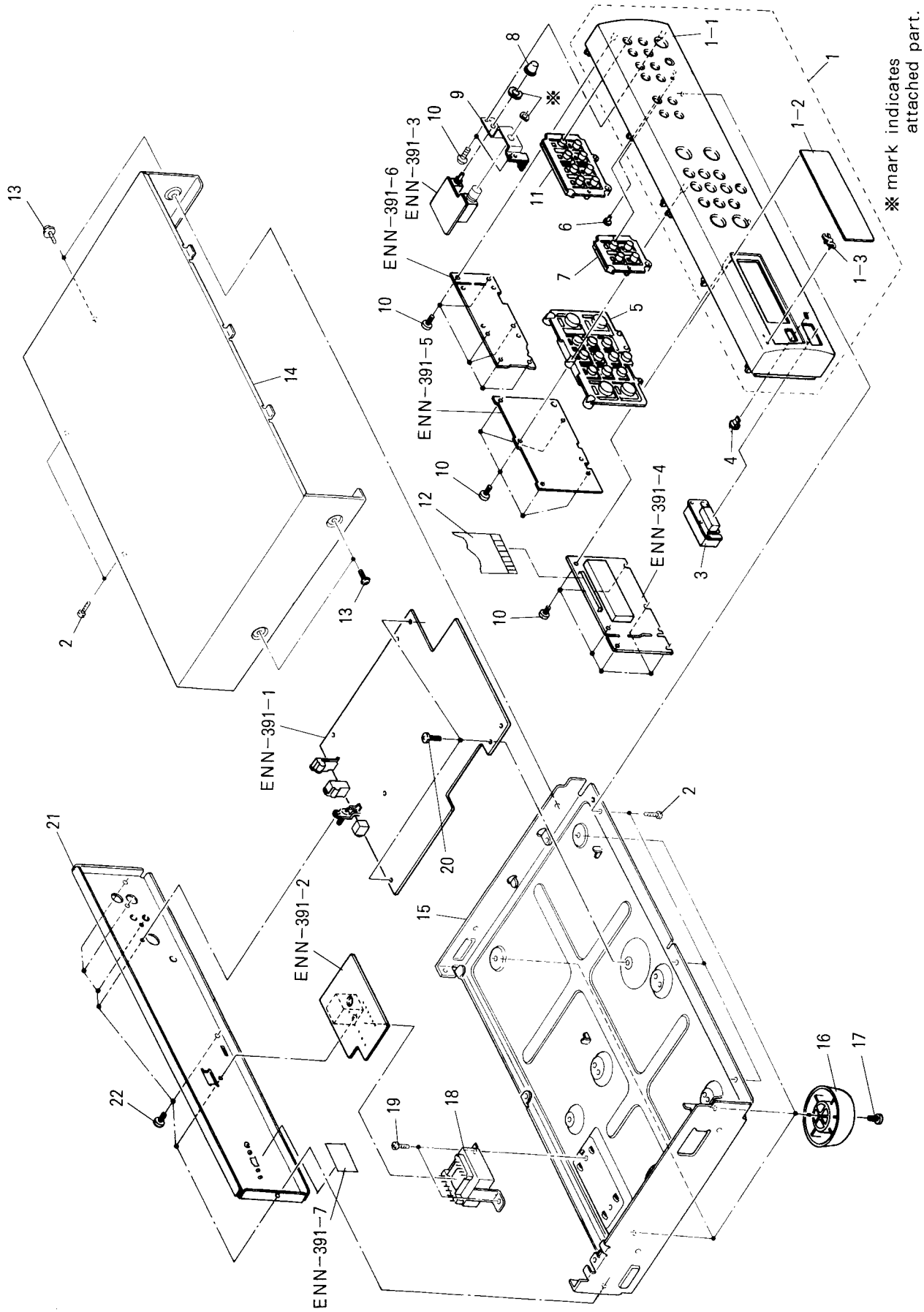

Symbol No. M 6 M M

■ Parts List

⚠	Item	Part Number	Part Name	Q'ty	Description	Area
	1	EFP-XLMC100CE(S	FRONT PANEL ASSY	1		
	1-1	E102790-002ST	FRONT PANEL	1		
	1-2	E308739-002	CD W.SCREEN	2		
	1-3	VJD5429-001	JVC MARK	1		
	2	SDSG3008M	SCREW	5		
	3	E308738-002ST	PUSH BUTTON	1		
	4	FSJD4001-001	POWER INDICATOR	1		
	5	E208019-004ST	PUSH BUTTON	1		
	6	E406686-001	INDICATOR	1		
	7	E208021-002ST	PUSH BUTTON	1		
	8	VXL4425-002	KNOB	1		
	9	E407850-001	HEADPHONE BRACKET	1		
	10	SDSF2608Z	SCREW	19		
	11	E208022-002ST	PUSH BUTTON	1		
	12	EWR129K-30TT	FFC CABLE	1		
	13	E61660-004	SPECIAL SCREW	4		
	14	E26222-001	METAL COVER	1		
	15	E11864-007	CHASSIS BASE	1		
	16	FSYH4001-00F	FOOT ASSY	4		BS
		FSYH4001-00F	FOOT ASSY	4		EF
		FSYH4001-00F	FOOT ASSY	4		EN
		FSYH4001-00F	FOOT ASSY	4		G
		FSYH4001-00E	FOOT ASSY	4		U
		FSYH4001-00E	FOOT ASSY	4		US
		FSYH4001-00E	FOOT ASSY	4		UT
	17	SBST3010Z	TAPPING SCREW	4		
⚠	18	ETP1010-51EABS	POWER TRANSFORMER	1		BS
⚠		ETP1010-51EA	POWER TRANSFORMER	1		EF
⚠		ETP1010-51EA	POWER TRANSFORMER	1		EN
⚠		ETP1010-51EA	POWER TRANSFORMER	1		G
⚠		ETP1010-51LA	POWER TRANSFORMER	1		U
⚠		ETP1010-51EA	POWER TRANSFORMER	1		US
⚠		ETP1010-51LA	POWER TRANSFORMER	1		UT
	19	E65389-002	SPECIAL SCREW	2		
	20	SBSG3008Z	TAPPING SCREW	3		
	21	E208029-005	REAR PANEL	1		BS
		E208029-005	REAR PANEL	1		EF
		E208029-005	REAR PANEL	1		EN
		E208029-005	REAR PANEL	1		G
		E208029-004	REAR PANEL	1		U
		E208029-005	REAR PANEL	1		US
		E208029-004	REAR PANEL	1		UT
	-	E308453-034	RATING LABEL	1		EF
	-	E308453-034	RATING LABEL	1		EN
	-	E308453-035F	RATING LABEL	1		G
	-	E308453-034	RATING LABEL	1		US
	-	E308287-046	RATING LABEL	1		UT
	22	E73273-006	SPECIAL SCREW	7		
	23	SBSF2608M	SPECIAL SCREW	2		U
		SBSF2608M	SPECIAL SCREW	2		UT
	-	E61029-005	NUMBER LABEL	1		
	-	QZL1007-001	BEAB LABEL	1		BS
	-	QZL1031-101	LABEL	1		EF
	-	E70027-001	LABEL	1		EN
	-	E70419-003F	MARK LABEL	1		G

⚠ : Safety Parts

The Marks for Designated Areas

BS .... the U.K. EF ..... Continental Europe EN .... Scandinavia G ..... Germany
U ..... Universal Type US ..... Singapore UT .... Taiwan
No mark indicates all area.

Printed Circuit Board Ass'y and Parts List

■ ENN-391 □ Control PC Board Ass'y

Note : ENN-391 □ varies according to the areas employed. See note (1) when placing an order.

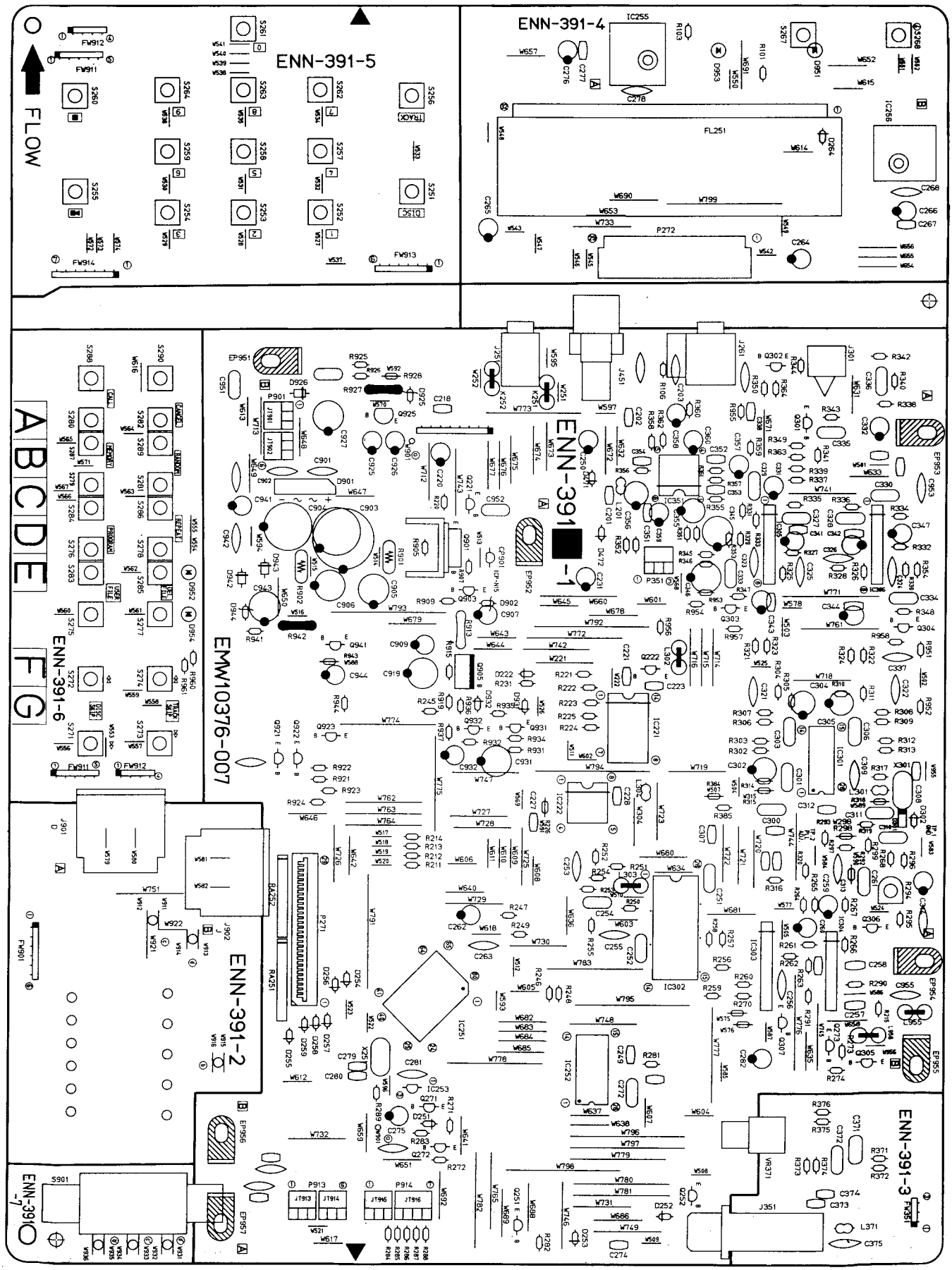

Note (1)

PC Board Ass'y	Version	Designated Areas
ENN-391 D	U UT	Universal Type Taiwan
ENN-391 E	EF EN US	Continental Europe Scandinavia Singapore
ENN-391 F BS	BS	the U.K.
ENN-391 G	G	Germany

TRANSISTORS

⚠	ITEM	PART NUMBER	DESCRIPTION	AREA
	Q222	DTC144ES	DIGITAL TRA ROHM	BS
	Q222	DTC144ES	DIGITAL TRA ROHM	EF
	Q222	DTC144ES	DIGITAL TRA ROHM	EN
	Q222	DTC144ES	DIGITAL TRA ROHM	G
	Q222	DTC144ES	DIGITAL TRA ROHM	U
	Q222	DTC144ES	DIGITAL TRA ROHM	US
	Q222	DTC144ES	DIGITAL TRA ROHM	UT
	Q251	DTC114YS	DIGITAL TRA ROHM	
	Q252	DTA114YS	DIGITAL TRA ROHM	
	Q271	DTC144ES	DIGITAL TRA ROHM	BS
	Q271	DTC144ES	DIGITAL TRA ROHM	EF
	Q271	DTC144ES	DIGITAL TRA ROHM	EN
	Q271	DTC144ES	DIGITAL TRA ROHM	G
	Q271	DTC144ES	DIGITAL TRA ROHM	U
	Q271	DTC144ES	DIGITAL TRA ROHM	US
	Q271	DTC144ES	DIGITAL TRA ROHM	UT
	Q272	DTA144ES	DIGITAL TRA ROHM	
	Q273	2SC1740S(R,S)	SI.TRANSIST ROHM	
	Q301	2SD1302(S,T)	SI.TRANSIST	
	Q302	2SD1302(S,T)	SI.TRANSIST	
	Q303	2SD1302(S,T)	SI.TRANSIST	
	Q304	2SD1302(S,T)	SI.TRANSIST	
	Q305	DTA144ES	DIGITAL TRA ROHM	
	Q306	2SC1740S(R,S)	SI.TRANSIST ROHM	
	Q307	DTA144ES	DIGITAL TRA ROHM	
	Q901	2SB1287(E,F)	SILICON	
	Q903	2SD1302(S,T)	SI.TRANSIST	
	Q905	2SB1357(E,F)	SI.TRANSIST ROHM	
	Q921	2SD2144S(VW)	SI.TRANSIST ROHM	
	Q922	2SD2144S(VW)	SI.TRANSIST ROHM	
	Q923	DTA114YS	DIGITAL TRA ROHM	
	Q925	2SC2060(Q,R)	SI.TRANSIST ROHM	
	Q931	2SA933S(RS)	SI.TRANSIST	
	Q932	2SD2144S(VW)	SI.TRANSIST ROHM	
	Q941	2SA933S(RS)	SI.TRANSIST	

I. C. S.

⚠	ITEM	PART NUMBER	DESCRIPTION	AREA
	IC221	HD74LS05P	I.C.	BS
	IC221	HD74LS05P	I.C.	EF
	IC221	HD74LS05P	I.C.	EN
	IC221	HD74LS05P	I.C.	G
	IC221	HD74LS05P	I.C.	U
	IC221	HD74LS05P	I.C.	US
	IC221	HD74LS05P	I.C.	UT
	IC222	SN75451BP	I.C(MONO-AN	
	IC251	M38173M6-265FP	I.C.	BS
	IC251	M38173M6-265FP	I.C.	EF
	IC251	M38173M6-265FP	I.C.	EN
	IC251	M38173M6-265FP	I.C.	G
	IC251	M38173M6-265FP	I.C.	U
	IC251	M38173M6-265FP	I.C.	US
	IC251	M38173M6-265FP	I.C.	UT
	IC252	UPD71051GU	I.C(MICRO-C NEC	
	IC253	MN1281(P,Q)	I.C(DIGI-MO MATSUSHITA	
	IC256	GP1U571X	INFRARED DE SHARP	BS
	IC256	GP1U571X	INFRARED DE SHARP	EF
	IC256	GP1U571X	INFRARED DE SHARP	EN
	IC256	GP1U571X	INFRARED DE SHARP	G
	IC256	GP1U571X	INFRARED DE SHARP	U
	IC256	GP1U571X	INFRARED DE SHARP	US
	IC256	GP1U571X	INFRARED DE SHARP	UT
	IC301	MN35500	I.C(DIGI-MO MATSUSHITA	
	IC302	TC9245N	I.C(DIGI-MO TOSHIBA	
	IC303	TC5081AP	I.C(DIGI-MO TOSHIBA	
	IC304	VC4580L	I.C(MONO-AN DAINICHI	
	IC305	VC4580L	I.C(MONO-AN DAINICHI	
	IC306	VC4580L	I.C(MONO-AN DAINICHI	
	IC351	VC4580D	I.C(MONO-AN	

⚠ : SAFETY PARTS

DIODES

⚠	ITEM	PART NUMBER	DESCRIPTION	AREA
	D222	1SS133	SI.DIODE ROHM	BS
	D222	1SS133	SI.DIODE ROHM	EF
	D222	1SS133	SI.DIODE ROHM	EN
	D222	1SS133	SI.DIODE ROHM	G
	D222	1SS133	SI.DIODE ROHM	U
	D222	1SS133	SI.DIODE ROHM	US
	D222	1SS133	SI.DIODE ROHM	UT
	D251	1SS133	SI.DIODE ROHM	
	D252	1SS133	SI.DIODE ROHM	
	D253	1SS133	SI.DIODE ROHM	
	D254	1SS133	SI.DIODE ROHM	
	D255	1SS133	SI.DIODE ROHM	
	D256	1SS133	SI.DIODE ROHM	
	D257	1SS133	SI.DIODE ROHM	
	D258	1SS133	SI.DIODE ROHM	
	D259	1SS133	SI.DIODE ROHM	
	D264	1SS133	SI.DIODE ROHM	
	D302	1SV145B-T3	DIODE HITACHI	BS
	D302	1SV145B-T3	DIODE HITACHI	EF
	D302	1SV145B-T3	DIODE HITACHI	EN
	D302	1SV145B-T3	DIODE HITACHI	G
	D302	1SV145B-T3	DIODE HITACHI	U
	D302	1SV145B-T3	DIODE HITACHI	US
	D302	1SV145B-T3	DIODE HITACHI	UT
	D471	1SS133	SI.DIODE ROHM	BS
	D471	1SS133	SI.DIODE ROHM	EF
	D471	1SS133	SI.DIODE ROHM	EN
	D471	1SS133	SI.DIODE ROHM	G
	D471	1SS133	SI.DIODE ROHM	U
	D471	1SS133	SI.DIODE ROHM	US
	D471	1SS133	SI.DIODE ROHM	UT
⚠	D901	S1VB20F	SI.DIODE SINDENGEN	
	D902	MTZ5.6JB	ZENER DIODE ROHM	
	D925	MTZ10JC	ZENER DIODE ROHM	
	D926	1SR139-200	SI.DIODE ROHM	
	D931	1SS133	SI.DIODE ROHM	
	D932	1SS133	SI.DIODE ROHM	
	D943	1SR139-200	SI.DIODE ROHM	
	D944	MTZ33JC	ZENER DIODE ROHM	
	D951	SLR-380LT	L.E.D. ROHM	BS
	D951	SLR-342VC3F	L.E.D. ROHM	EF
	D951	SLR-342VC3F	L.E.D. ROHM	EN
	D951	SLR-342VC3F	L.E.D. ROHM	G
	D951	SLR-342VC3F	L.E.D. ROHM	U
	D951	SLR-342VC3F	L.E.D. ROHM	US
	D951	SLR-342VC3F	L.E.D. ROHM	UT
	D952	SLR-342VC3F	L.E.D. ROHM	BS
	D952	SLR-342VC3F	L.E.D. ROHM	EF
	D952	SLR-342VC3F	L.E.D. ROHM	EN
	D952	SLR-342VC3F	L.E.D. ROHM	G
	D952	SLR-342VC3F	L.E.D. ROHM	U
	D952	SLR-342VC3F	L.E.D. ROHM	US
	D952	SLR-342VC3F	L.E.D. ROHM	UT

CAPACITORS

⚠	ITEM	PART NUMBER	DESCRIPTION	AREA
	C201	QCT30CH-180Y	18PF 50V CER.CAPACI	
	C202	QCBB1HK-101Y	100PF 50V CER.CAPACI	
	C221	QCBB1HK-101Y	100PF 50V CER.CAPACI	
	C223	QCHB1EZ-223	0.022MF 25V CER.CAPACI	
	C228	QCHB1EZ-223	0.022MF 25V CER.CAPACI	
	C231	QETB1HM-225	2.2MF 50V E.CAPACITO	BS
	C231	QETB1HM-225	2.2MF 50V E.CAPACITO	EF
	C231	QETB1HM-225	2.2MF 50V E.CAPACITO	EN
	C231	QETB1HM-225	2.2MF 50V E.CAPACITO	G
	C231	QETB1HM-225	2.2MF 50V E.CAPACITO	U
	C231	QETB1HM-225	2.2MF 50V E.CAPACITO	US
	C231	QETB1HM-225	2.2MF 50V E.CAPACITO	UT
	C249	QCBB1HK-101Y	100PF 50V CER.CAPACI	
	C250	QETB1EM-226	22MF 25V E.CAPACITO	
	C251	QFV81HJ-104	0.1MF 50V THIN FILM	
	C252	QFV81HJ-104	0.1MF 50V THIN FILM	
	C253	QCS21HJ-221	220PF 50V CER.CAPACI	
	C254	QFV81HJ-473	0.047MF 50V THIN FILM	
	C255	QCS21HJ-121	120PF 50V CER.CAPACI	
	C256	QCF21HP-223A	0.022MF 50V CER.CAPACI	
	C257	QCHB1EZ-223	0.022MF 25V CER.CAPACI	
	C258	QCHB1EZ-223	0.022MF 25V CER.CAPACI	
	C259	QETB1EM-106	10MF 25V AL E.CAPAC	
	C260	QETB1HM-105	1MF 50V AL E.CAPAC	
	C261	QFV81HJ-104	0.1MF 50V THIN FILM	
	C262	QETB1HM-106	10MF 50V E.CAPACITO	
	C263	QCF21HP-223A	0.022MF 50V CER.CAPACI	
	C264	QER51HM-475	4.7MF 50V AL E.CAPAC	
	C265	QER51HM-475	4.7MF 50V AL E.CAPAC	
	C266	QER50JM-476	47MF 6.3V AL E.CAPAC	BS
	C266	QER50JM-476	47MF 6.3V AL E.CAPAC	EF
	C266	QER50JM-476	47MF 6.3V AL E.CAPAC	EN
	C266	QER50JM-476	47MF 6.3V AL E.CAPAC	G
	C266	QER50JM-476	47MF 6.3V AL E.CAPAC	U
	C266	QER50JM-476	47MF 6.3V AL E.CAPAC	US

⚠ : SAFETY PARTS

CAPACITORS

⚠	ITEM	PART NUMBER	DESCRIPTION			AREA
	C266	QER50JM-476	47MF	6.3V	AL E.CAPAC	UT
	C267	QCHB1EZ-223	0.022MF	25V	CER.CAPACI	BS
	C267	QCHB1EZ-223	0.022MF	25V	CER.CAPACI	EF
	C267	QCHB1EZ-223	0.022MF	25V	CER.CAPACI	EN
	C267	QCHB1EZ-223	0.022MF	25V	CER.CAPACI	G
	C267	QCHB1EZ-223	0.022MF	25V	CER.CAPACI	U
	C267	QCHB1EZ-223	0.022MF	25V	CER.CAPACI	US
	C267	QCHB1EZ-223	0.022MF	25V	CER.CAPACI	UT
	C268	QCS21HJ-101A	100PF	50V	CER.CAPACI	BS
	C268	QCS21HJ-101A	100PF	50V	CER.CAPACI	EF
	C268	QCS21HJ-101A	100PF	50V	CER.CAPACI	EN
	C268	QCS21HJ-101A	100PF	50V	CER.CAPACI	G
	C268	QCS21HJ-101A	100PF	50V	CER.CAPACI	U
	C268	QCS21HJ-101A	100PF	50V	CER.CAPACI	US
	C268	QCS21HJ-101A	100PF	50V	CER.CAPACI	UT
	C272	QCZ0205-155	1.5MF	25V	C.CAPACITO	
	C274	QCBB1HK-331Y	330PF	50V	CER.CAPACI	
	C275	QETB1EM-106	10MF	25V	AL E.CAPAC	
	C279	QCT30CH-120Y	12PF	50V	CER.CAPACI	
	C280	QCT30CH-120Y	12PF	50V	CER.CAPACI	
	C281	QCS21HJ-101A	100PF	50V	CER.CAPACI	
	C282	QETB1HM-474	0.47MF	50V	ELECTRO	
	C300	QCZ0205-155	1.5MF	25V	C.CAPACITO	
	C301	QCZ0205-155	1.5MF	25V	C.CAPACITO	
	C302	QETB1AM-227	220MF	10V	E.CAPACITO	
	C303	QCZ0205-155	1.5MF	25V	C.CAPACITO	
	C304	QETB0JM-227	220MF	6.3V	E.CAPACITO	
	C305	QETB0JM-227	220MF	6.3V	E.CAPACITO	
	C306	QCZ0205-155	1.5MF	25V	C.CAPACITO	
	C307	QCT30CH-6R8	6.8PF	50V	CERAMIC	
	C308	QCT30CH-100Y	10PF	50V	CER.CAPACI	
	C309	QCS21HJ-270	27PF	50V	CER.CAPACI	BS
	C309	QCS21HJ-270	27PF	50V	CER.CAPACI	EF
	C309	QCS21HJ-270	27PF	50V	CER.CAPACI	EN
	C309	QCS21HJ-270	27PF	50V	CER.CAPACI	G
	C309	QCS21HJ-270	27PF	50V	CER.CAPACI	U
	C309	QCS21HJ-270	27PF	50V	CER.CAPACI	US
	C309	QCS21HJ-270	27PF	50V	CER.CAPACI	UT
	C310	QFV81HJ-104	0.1MF	50V	THIN FILM	
	C311	QFN81HJ-102	1000PF	50V	METAL.MYLA	
	C312	QCSB1HJ-100	10PF	50V	CER.CAPACI	
	C313	QCF21HP-223A	0.022MF	50V	CER.CAPACI	
	C321	QCS21HJ-221	220PF	50V	CER.CAPACI	
	C322	QCS21HJ-221	220PF	50V	CER.CAPACI	
	C323	QCS21HJ-121	120PF	50V	CER.CAPACI	
	C324	QCS21HJ-121	120PF	50V	CER.CAPACI	
	C325	QCS21HJ-121	120PF	50V	CER.CAPACI	
	C326	QCS21HJ-121	120PF	50V	CER.CAPACI	
	C327	QFN81HJ-182	1800PF	50V	METAL.MYLA	
	C328	QFN81HJ-182	1800PF	50V	METAL.MYLA	
	C329	QFV81HJ-103	0.01MF	50V	THIN FILM	
	C330	QFV81HJ-103	0.01MF	50V	THIN FILM	
	C331	QETB1CM-476	47MF	16V	AL E.CAPAC	
	C332	QETB1CM-476	47MF	16V	AL E.CAPAC	
	C333	QFV81HJ-683	0.068MF	50V	T.FILM	
	C334	QFV81HJ-683	0.068MF	50V	T.FILM	
	C335	QFN81HJ-562	5600PF	50V	METAL.MYLA	
	C336	QFN81HJ-562	5600PF	50V	METAL.MYLA	
	C337	QCF21HP-103A	0.01MF	50V	CER.CAPACI	
	C338	QCVB1CM-103Y	0.01MF	16V	CER.CAPACI	
	C341	QCHB1EZ-223	0.022MF	25V	CER.CAPACI	
	C342	QCHB1EZ-223	0.022MF	25V	CER.CAPACI	
	C343	QCHB1EZ-223	0.022MF	25V	CER.CAPACI	
	C344	QCHB1EZ-223	0.022MF	25V	CER.CAPACI	
	C345	QETB1CM-227	220MF	16V	AL E.CAPAC	
	C346	QETB1CM-227	220MF	16V	AL E.CAPAC	
	C351	QCHB1EZ-223	0.022MF	25V	CER.CAPACI	
	C352	QCHB1EZ-223	0.022MF	25V	CER.CAPACI	
	C353	QCBB1HK-181Y	180PF	50V	CER.CAPACI	
	C354	QCBB1HK-181Y	180PF	50V	CER.CAPACI	
	C355	QETB1CM-107	100MF	16V	AL E.CAPAC	
	C356	QETB1CM-107	100MF	16V	AL E.CAPAC	
	C357	QETB1HM-475E	4.7MF	50V	E.CAPACITO	
	C358	QETB1HM-475E	4.7MF	50V	E.CAPACITO	
	C359	QETB1CM-476	47MF	16V	AL E.CAPAC	
	C360	QETB1CM-476	47MF	16V	AL E.CAPAC	
	C371	QFN81HJ-103	0.01MF	50V	METAL.MYLA	
	C372	QFN81HJ-103	0.01MF	50V	METAL.MYLA	
	C373	QCHB1EZ-223	0.022MF	25V	CER.CAPACI	
	C374	QCHB1EZ-223	0.022MF	25V	CER.CAPACI	
	C375	QCF21HP-223A	0.022MF	50V	CER.CAPACI	
	C471	QCS21HJ-121	120PF	50V	CER.CAPACI	
	C901	QFV81HJ-104	0.1MF	50V	THIN FILM	BS
	C901	QFV81HJ-104	0.1MF	50V	THIN FILM	EF
	C901	QFV81HJ-104	0.1MF	50V	THIN FILM	EN
	C901	QFV81HJ-104	0.1MF	50V	THIN FILM	G
	C901	QFV81HJ-104	0.1MF	50V	THIN FILM	U
	C901	QFV81HJ-104	0.1MF	50V	THIN FILM	US
	C901	QFV81HJ-104	0.1MF	50V	THIN FILM	UT
	C902	QFV81HJ-104	0.1MF	50V	THIN FILM	BS
	C902	QFV81HJ-104	0.1MF	50V	THIN FILM	EF
	C902	QFV81HJ-104	0.1MF	50V	THIN FILM	EN
	C902	QFV81HJ-104	0.1MF	50V	THIN FILM	G
	C902	QFV81HJ-104	0.1MF	50V	THIN FILM	U
	C902	QFV81HJ-104	0.1MF	50V	THIN FILM	US

⚠ : SAFETY PARTS

CAPACITORS

⚠	ITEM	PART NUMBER	DESCRIPTION			AREA
	C902	QFV81HJ-104	0.1MF	50V	THIN FILM	UT
	C903	QETB1CM-338M	3300MF	16V	E.CAPACITO	BS
	C903	QETB1CM-338M	3300MF	16V	E.CAPACITO	EF
	C903	QETB1CM-338M	3300MF	16V	E.CAPACITO	EN
	C903	QETB1CM-338M	3300MF	16V	E.CAPACITO	G
	C903	QETB1CM-338M	3300MF	16V	E.CAPACITO	U
	C903	QETB1CM-338M	3300MF	16V	E.CAPACITO	US
	C903	QETB1CM-338M	3300MF	16V	E.CAPACITO	UT
	C904	QETB1CM-228M	2200MF	16V	E.CAPACITO	
	C907	QETB1HM-225	2.2MF	50V	E.CAPACITO	
	C909	QETB1AM-476	47MF	10V	E.CAPACITO	
	C919	QETB0JM-477	470MF	6.3V	AL E.CAPAC	
	C925	QETB1HM-474	1MF	50V	AL E.CAPAC	
	C926	QETB1CM-476	47MF	16V	AL E.CAPAC	
	C927	QETB1HM-107	100MF	50V	E.CAPACITO	
	C931	QETB1CM-227	220MF	16V	AL E.CAPAC	
	C932	QETB1CM-226	22MF	16V	E.CAPACITO	
	C943	QETB1HM-107	100MF	50V	E.CAPACITO	
	C951	QCZ0205-155	1.5MF	25V	C.CAPACITO	BS
	C951	QCZ0205-155	1.5MF	25V	C.CAPACITO	EF
	C951	QCZ0205-155	1.5MF	25V	C.CAPACITO	EN
	C951	QCZ0205-155	1.5MF	25V	C.CAPACITO	G
	C951	QCZ0205-155	1.5MF	25V	C.CAPACITO	U
	C951	QCZ0205-155	1.5MF	25V	C.CAPACITO	US
	C951	QCZ0205-155	1.5MF	25V	C.CAPACITO	UT
	C955	QCF31HP-102Z	1000PF	50V	CER.CAPACI	BS
	C955	QCF31HP-102Z	1000PF	50V	CER.CAPACI	EF
	C955	QCF31HP-102Z	1000PF	50V	CER.CAPACI	EN
	C955	QCF31HP-102Z	1000PF	50V	CER.CAPACI	G
	C955	QCF31HP-102Z	1000PF	50V	CER.CAPACI	U
	C955	QCF31HP-102Z	1000PF	50V	CER.CAPACI	US
	C955	QCF31HP-102Z	1000PF	50V	CER.CAPACI	UT

RESISTORS

⚠	ITEM	PART NUMBER	DESCRIPTION			AREA
	R101	QRD161J-331	330	1/6W	CARBON RES	BS
	R101	QRD161J-331	330	1/6W	CARBON RES	EF
	R101	QRD161J-331	330	1/6W	CARBON RES	EN
	R101	QRD161J-331	330	1/6W	CARBON RES	G
	R101	QRD161J-331	330	1/6W	CARBON RES	U
	R101	QRD161J-331	330	1/6W	CARBON RES	US
	R101	QRD161J-331	330	1/6W	CARBON RES	UT
	R106	QRD167J-471	470	1/6W	CARBON RES	
	R211	QRD161J-222	2.2K	1/6W	CARBON RES	
	R212	QRD161J-222	2.2K	1/6W	CARBON RES	
	R213	QRD161J-222	2.2K	1/6W	CARBON RES	
	R214	QRD161J-222	2.2K	1/6W	CARBON RES	
	R215	QRD161J-472	4.7K	1/6W	CARBON RES	
	R220	QRD161J-472	4.7K	1/6W	CARBON RES	BS
	R220	QRD161J-472	4.7K	1/6W	CARBON RES	EF
	R220	QRD161J-472	4.7K	1/6W	CARBON RES	EN
	R220	QRD161J-472	4.7K	1/6W	CARBON RES	G
	R220	QRD161J-472	4.7K	1/6W	CARBON RES	U
	R220	QRD161J-472	4.7K	1/6W	CARBON RES	US
	R220	QRD161J-472	4.7K	1/6W	CARBON RES	UT
	R221	QRD167J-151	150	1/6W	CARBON RES	
	R222	QRD161J-221	220	1/6W	CARBON RES	
	R223	QRD161J-472	4.7K	1/6W	CARBON RES	
	R224	QRD161J-472	4.7K	1/6W	CARBON RES	
	R225	QRD167J-151	150	1/6W	CARBON RES	
	R231	QRD161J-473	47K	1/6W	CARBON RES	BS
	R231	QRD161J-473	47K	1/6W	CARBON RES	EF
	R231	QRD161J-473	47K	1/6W	CARBON RES	EN
	R231	QRD161J-473	47K	1/6W	CARBON RES	G
	R231	QRD161J-473	47K	1/6W	CARBON RES	U
	R231	QRD161J-473	47K	1/6W	CARBON RES	US
	R231	QRD161J-473	47K	1/6W	CARBON RES	UT
	R245	QRD161J-472	4.7K	1/6W	CARBON RES	
	R246	QRD161J-472	4.7K	1/6W	CARBON RES	
	R247	QRD161J-472	4.7K	1/6W	CARBON RES	
	R248	QRD161J-472	4.7K	1/6W	CARBON RES	
	R249	QRD161J-472	4.7K	1/6W	CARBON RES	
	R251	QRD167J-751	750	1/6W	CARBON RES	
	R252	QRD167J-751	750	1/6W	CARBON RES	
	R253	QRD167J-751	750	1/6W	CARBON RES	
	R254	QRD161J-104	100K	1/6W	CARBON RES	
	R255	QRD161J-122	1.2K	1/6W	CARBON RES	
	R256	QRD167J-102	1K	1/6W	CARBON RES	
	R257	QRD161J-221	220	1/6W	CARBON RES	
	R258	QRD167J-102	1K	1/6W	CARBON RES	
	R259	QRD167J-102	1K	1/6W	CARBON RES	
	R260	QRD161J-221	220	1/6W	CARBON RES	
	R261	QRD167J-102	1K	1/6W	CARBON RES	
	R262	QRD161J-103	10K	1/6W	CARBON RES	
	R263	QRD161J-103	10K	1/6W	CARBON RES	
	R265	QRD161J-222	2.2K	1/6W	CARBON RES	
	R267	QRD161J-473	47K	1/6W	CARBON RES	
	R268	QRD161J-473	47K	1/6W	CARBON RES	
	R271	QRD161J-472	4.7K	1/6W	CARBON RES	
	R272	QRD161J-472	4.7K	1/6W	CARBON RES	

⚠ : SAFETY PARTS

RESISTORS

⚠	ITEM	PART NUMBER	DESCRIPTION			AREA
	R273	QRD161J-472	4.7K	1/6W	CARBON RES	
	R274	QRD161J-473	47K	1/6W	CARBON RES	
	R281	QRD161J-101	100	1/6W	CARBON RES	
	R282	QRD161J-472	4.7K	1/6W	CARBON RES	
	R283	QRD161J-821	820	1/6W	CARBON RES	
	R284	QRD161J-473	47K	1/6W	CARBON RES	
	R284	QRD161J-473	47K	1/6W	CARBON RES	BS
	R284	QRD161J-473	47K	1/6W	CARBON RES	EF
	R284	QRD161J-473	47K	1/6W	CARBON RES	EN
	R284	QRD161J-473	47K	1/6W	CARBON RES	G
	R284	QRD161J-473	47K	1/6W	CARBON RES	U
	R284	QRD161J-473	47K	1/6W	CARBON RES	US
	R284	QRD161J-473	47K	1/6W	CARBON RES	UT
	R285	QRD161J-473	47K	1/6W	CARBON RES	BS
	R285	QRD161J-473	47K	1/6W	CARBON RES	EF
	R285	QRD161J-473	47K	1/6W	CARBON RES	EN
	R285	QRD161J-473	47K	1/6W	CARBON RES	G
	R285	QRD161J-473	47K	1/6W	CARBON RES	U
	R285	QRD161J-473	47K	1/6W	CARBON RES	US
	R285	QRD161J-473	47K	1/6W	CARBON RES	UT
	R286	QRD161J-473	47K	1/6W	CARBON RES	BS
	R286	QRD161J-473	47K	1/6W	CARBON RES	EF
	R286	QRD161J-473	47K	1/6W	CARBON RES	EN
	R286	QRD161J-473	47K	1/6W	CARBON RES	G
	R286	QRD161J-473	47K	1/6W	CARBON RES	U
	R286	QRD161J-473	47K	1/6W	CARBON RES	US
	R286	QRD161J-473	47K	1/6W	CARBON RES	UT
	R287	QRD161J-473	47K	1/6W	CARBON RES	BS
	R287	QRD161J-473	47K	1/6W	CARBON RES	EF
	R287	QRD161J-473	47K	1/6W	CARBON RES	EN
	R287	QRD161J-473	47K	1/6W	CARBON RES	G
	R287	QRD161J-473	47K	1/6W	CARBON RES	U
	R287	QRD161J-473	47K	1/6W	CARBON RES	US
	R287	QRD161J-473	47K	1/6W	CARBON RES	UT
	R288	QRD161J-103	10K	1/6W	CARBON RES	BS
	R288	QRD161J-103	10K	1/6W	CARBON RES	EF
	R288	QRD161J-103	10K	1/6W	CARBON RES	EN
	R288	QRD161J-103	10K	1/6W	CARBON RES	G
	R288	QRD161J-103	10K	1/6W	CARBON RES	U
	R288	QRD161J-103	10K	1/6W	CARBON RES	US
	R288	QRD161J-103	10K	1/6W	CARBON RES	UT
	R289	QRD161J-105	1M	1/6W	CARBON RES	
	R290	QRD161J-103	10K	1/6W	CARBON RES	
	R291	QRD161J-103	10K	1/6W	CARBON RES	
	R293	QRD167J-102	1K	1/6W	CARBON RES	
	R294	QVPA601-103A	10K		TRIMMER RE	
	R295	QRD161J-472	4.7K	1/6W	CARBON RES	
	R296	QRD161J-104	100K	1/6W	CARBON RES	
	R297	QRD167J-560	56	1/6W	CARBON RES	
	R298	QRD167J-121	120	1/6W	CARBON RES	
	R299	QRD167J-102	1K	1/6W	CARBON RES	
⚠	R302	QRV144F-1802	18K	1/4W	CONST.META	
⚠	R303	QRV144F-1802	18K	1/4W	CONST.META	
	R304	QRD161J-271	270	1/6W	CARBON RES	
	R305	QRD161J-182	1.8K	1/6W	CARBON RES	
⚠	R306	QRV144F-1802	18K	1/4W	CONST.META	
⚠	R307	QRV144F-1802	18K	1/4W	CONST.META	
⚠	R308	QRV144F-1802	18K	1/4W	CONST.META	
⚠	R309	QRV144F-1802	18K	1/4W	CONST.META	
	R310	QRD161J-182	1.8K	1/6W	CARBON RES	
	R311	QRD161J-271	270	1/6W	CARBON RES	
⚠	R312	QRV144F-1802	18K	1/4W	CONST.META	
⚠	R313	QRV144F-1802	18K	1/4W	CONST.META	
	R314	QRD167J-560	56	1/6W	CARBON RES	
	R315	QRD167J-560	56	1/6W	CARBON RES	
	R316	QRD167J-102	1K	1/6W	CARBON RES	
	R317	QRD161J-331	330	1/6W	CARBON RES	
	R319	QRD167J-155	1.5M	1/6W	CARBON RES	
	R320	QRD167J-102	1K	1/6W	CARBON RES	
	R321	QRD161J-243	24K	1/6W	CARBON RES	
	R322	QRD161J-243	24K	1/6W	CARBON RES	
	R323	QRD161J-243	24K	1/6W	CARBON RES	
	R324	QRD161J-243	24K	1/6W	CARBON RES	
	R325	QRD161J-333	33K	1/6W	CARBON RES	
	R326	QRD161J-333	33K	1/6W	CARBON RES	
	R327	QRD161J-333	33K	1/6W	CARBON RES	
	R328	QRD161J-333	33K	1/6W	CARBON RES	
	R329	QRD167J-511	510	1/6W	CARBON RES	
	R330	QRD167J-511	510	1/6W	CARBON RES	
	R331	QRD161J-681	680	1/6W	CARBON RES	
	R332	QRD161J-681	680	1/6W	CARBON RES	
	R333	QRD161J-112	1.1K	1/6W	CARBON RES	
	R334	QRD161J-112	1.1K	1/6W	CARBON RES	
	R335	QRD161J-472	4.7K	1/6W	CARBON RES	
	R336	QRD161J-472	4.7K	1/6W	CARBON RES	
	R337	QRD161J-273	27K	1/6W	CARBON RES	

⚠ :SAFETY PARTS

RESISTORS

⚠	ITEM	PART NUMBER	DESCRIPTION			AREA
	R338	QRD161J-273	27K	1/6W	CARBON RES	
	R339	QRD167J-151	150	1/6W	CARBON RES	
	R340	QRD167J-151	150	1/6W	CARBON RES	
	R341	QRD167J-151	150	1/6W	CARBON RES	
	R342	QRD167J-151	150	1/6W	CARBON RES	
	R343	QRD167J-151	150	1/6W	CARBON RES	
	R344	QRD167J-151	150	1/6W	CARBON RES	
	R345	QRD161J-221	220	1/6W	CARBON RES	
	R346	QRD161J-221	220	1/6W	CARBON RES	
	R347	QRD161J-104	100K	1/6W	CARBON RES	
	R348	QRD161J-104	100K	1/6W	CARBON RES	
	R349	QRD161J-103	10K	1/6W	CARBON RES	
	R350	QRD161J-103	10K	1/6W	CARBON RES	
	R351	QRD161J-221	220	1/6W	CARBON RES	
	R352	QRD161J-221	220	1/6W	CARBON RES	
	R353	QRD161J-241	240	1/6W	CARBON RES	
	R354	QRD161J-241	240	1/6W	CARBON RES	
	R355	QRD167J-153	15K	1/6W	CARBON RES	
	R356	QRD167J-153	15K	1/6W	CARBON RES	
	R357	QRD161J-273	27K	1/6W	CARBON RES	
	R358	QRD161J-273	27K	1/6W	CARBON RES	
	R359	QRD161J-473	47K	1/6W	CARBON RES	
	R360	QRD161J-473	47K	1/6W	CARBON RES	
	R361	QRD161J-103	10K	1/6W	CARBON RES	
	R362	QRD161J-103	10K	1/6W	CARBON RES	
	R363	QRD161J-561	560	1/6W	CARBON RES	
	R364	QRD161J-561	560	1/6W	CARBON RES	
	R371	QRD167J-390	39	1/6W	CARBON	
	R372	QRD167J-390	39	1/6W	CARBON	
	R373	QRD167J-390	39	1/6W	CARBON	
	R374	QRD167J-390	39	1/6W	CARBON	
	R375	QRD167J-390	39	1/6W	CARBON	
	R376	QRD167J-390	39	1/6W	CARBON	
	R384	QRD167J-560	56	1/6W	CARBON RES	BS
	R384	QRD167J-560	56	1/6W	CARBON RES	EF
	R384	QRD167J-560	56	1/6W	CARBON RES	EN
	R384	QRD167J-560	56	1/6W	CARBON RES	G
	R384	QRD167J-560	56	1/6W	CARBON RES	U
	R384	QRD167J-560	56	1/6W	CARBON RES	US
	R384	QRD167J-560	56	1/6W	CARBON RES	UT
	R385	QRD167J-560	56	1/6W	CARBON RES	BS
	R385	QRD167J-560	56	1/6W	CARBON RES	EF
	R385	QRD167J-560	56	1/6W	CARBON RES	EN
	R385	QRD167J-560	56	1/6W	CARBON RES	G
	R385	QRD167J-560	56	1/6W	CARBON RES	U
	R385	QRD167J-560	56	1/6W	CARBON RES	US
	R385	QRD167J-560	56	1/6W	CARBON RES	UT
	R905	QRD161J-222	2.2K	1/6W	CARBON RES	
	R907	QRD161J-221	220	1/6W	CARBON RES	
	R909	QRD161J-221	220	1/6W	CARBON RES	
⚠	R913	QRD14CJ-122SX	1.2K	1/4W	UNF.CARBON	BS
⚠	R913	QRD14CJ-122SX	1.2K	1/4W	UNF.CARBON	EF
⚠	R913	QRD14CJ-122SX	1.2K	1/4W	UNF.CARBON	EN
⚠	R913	QRD14CJ-122SX	1.2K	1/4W	UNF.CARBON	G
⚠	R913	QRD14CJ-122SX	1.2K	1/4W	UNF.CARBON	U
⚠	R913	QRD14CJ-122SX	1.2K	1/4W	UNF.CARBON	US
⚠	R913	QRD14CJ-122SX	1.2K	1/4W	UNF.CARBON	UT
	R915	QRD167J-102	1K	1/6W	CARBON RES	
	R919	QRD161J-821	820	1/6W	CARBON RES	
	R921	QRD161J-103	10K	1/6W	CARBON RES	
	R922	QRD161J-103	10K	1/6W	CARBON RES	
	R923	QRD167J-152	1.5K	1/6W	CARBON RES	
	R924	QRD167J-152	1.5K	1/6W	CARBON RES	
	R925	QRD167J-123	5.6K	1/6W	CARBON RES	
	R926	QRD167J-123	5.6K	1/6W	CARBON RES	
	R931	QRD161J-331	330	1/6W	CARBON RES	
	R932	QRD161J-221	220	1/6W	CARBON RES	
	R934	QRD167J-822	8.2K	1/6W	CARBON RES	
	R935	QRD161J-683	68K	1/6W	CARBON RES	
	R936	QRD161J-473	47K	1/6W	CARBON RES	
	R937	QRD161J-473	47K	1/6W	CARBON RES	
	R941	QRD161J-123	12K	1/6W	CARBON RES	
⚠	R942	QRZ0077-560	56	1/4W	FUSIBLE RE	BS
⚠	R942	QRZ0077-560	56	1/4W	FUSIBLE RE	EF
⚠	R942	QRZ0077-560	56	1/4W	FUSIBLE RE	EN
⚠	R942	QRZ0077-560	56	1/4W	FUSIBLE RE	G
⚠	R942	QRZ0077-560	56	1/4W	FUSIBLE RE	U
⚠	R942	QRZ0077-560	56	1/4W	FUSIBLE RE	US
⚠	R942	QRZ0077-560	56	1/4W	FUSIBLE RE	UT
	R943	QRD167J-121	120	1/6W	CARBON RES	BS
	R943	QRD167J-121	120	1/6W	CARBON RES	EF
	R943	QRD167J-121	120	1/6W	CARBON RES	EN
	R943	QRD167J-121	120	1/6W	CARBON RES	G
	R943	QRD167J-121	120	1/6W	CARBON RES	U
	R943	QRD167J-121	120	1/6W	CARBON RES	US
	R943	QRD167J-121	120	1/6W	CARBON RES	UT
	R944	QRD161J-563	56K	1/6W	CARBON RES	
	R951	QRD161J-684	680K	1/6W	CARBON RES	
	R952	QRD167J-154	150K	1/6W	CARBON RES	
	R953	QRD161J-221	220	1/6W	CARBON RES	

⚠ :SAFETY PARTS

RESISTORS

⚠	ITEM	PART NUMBER	DESCRIPTION	AREA
	R954	QRD161J-221	220 1/6W CARBON RES	
	R955	QRD161J-684	680K 1/6W CARBON RES	
	R956	QRD167J-154	150K 1/6W CARBON RES	
	R957	QRD161J-392	3.9K 1/6W CARBON RES	
	R958	QRD161J-392	3.9K 1/6W CARBON RES	
	R960	QRD161J-331	330 1/6W CARBON RES	BS
	R960	QRD161J-331	330 1/6W CARBON RES	EF
	R960	QRD161J-331	330 1/6W CARBON RES	EN
	R960	QRD161J-331	330 1/6W CARBON RES	G
	R960	QRD161J-331	330 1/6W CARBON RES	U
	R960	QRD161J-331	330 1/6W CARBON RES	US
	R960	QRD161J-331	330 1/6W CARBON RES	UT
	RA251	QRB119J-104	100K 1/10W NETWORK RE	
	RA252	QRB119J-104	100K 1/10W NETWORK RE	
	VR371	QVAB79C-E53G	5K VARIABLE R	

OTHERS

⚠	ITEM	PART NUMBER	DESCRIPTION	AREA
		E70306-001	HEAT SINK	
		SBSE3008Z	SCREW	
		E75464-001	EARTH PLATE	
		E75819-001	SUPPORT HOL	
		E75820-001	SUPPORT HOL	
		E3400-439	FELT SPACER	
		QWE886-12RR	WIRE	U
		QWE888-17RR	WIRE	U
		QWE881-15RR	WIRE	U
		QWE886-12RR	WIRE	UT
		QWE888-17RR	WIRE	UT
		QWE881-15RR	WIRE	UT
	J251	QMS3L25-020	EARPHONE JA	
	J261	QMS3501-020	PIN JACK	
	J301	EMN00TV-217A	PIN JACK	BS
	J301	EMN00TV-217A	PIN JACK	EF
	J301	EMN00TV-217A	PIN JACK	EN
	J301	EMN00TV-217A	PIN JACK	G
	J301	EMN00TV-217A	PIN JACK	U
	J301	EMN00TV-217A	PIN JACK	US
	J301	EMN00TV-217A	PIN JACK	UT
	J351	QMS6A20-E21H	HEADPHONE J	
	J451	EMB91YV-101A	ANTENNA TER	
	J902	QMCB001-E02HBS	AC SOCKET	BS
	J902	QMCB001-E02H	AC SOCKET	EF
	J902	QMCB001-E02H	AC SOCKET	EN
	J902	QMCB001-E02H	AC SOCKET	G
	J902	QMCB001-E02H	AC SOCKET	U
	J902	QMCB001-E02H	AC SOCKET	US
	J902	QMCB001-E02H	AC SOCKET	UT
	L201	EQL4004-1R0	INDUCTOR	
	L302	ENZ8101-007	INDUCTOR	BS
	L302	ENZ8101-007	INDUCTOR	EF
	L302	ENZ8101-007	INDUCTOR	EN
	L302	ENZ8101-007	INDUCTOR	G
	L302	ENZ8101-007	INDUCTOR	U
	L302	ENZ8101-007	INDUCTOR	US
	L302	ENZ8101-007	INDUCTOR	UT
	L303	ENZ8101-007	INDUCTOR	BS
	L303	ENZ8101-007	INDUCTOR	EF
	L303	ENZ8101-007	INDUCTOR	EN
	L303	ENZ8101-007	INDUCTOR	G
	L303	ENZ8101-007	INDUCTOR	U
	L303	ENZ8101-007	INDUCTOR	US
	L303	ENZ8101-007	INDUCTOR	UT
	L304	EQL4007-4R7T	INDUCTOR	BS
	L304	EQL4007-4R7T	INDUCTOR	EF
	L304	EQL4007-4R7T	INDUCTOR	EN
	L304	EQL4007-4R7T	INDUCTOR	G
	L304	EQL4007-4R7T	INDUCTOR	U
	L304	EQL4007-4R7T	INDUCTOR	US
	L304	EQL4007-4R7T	INDUCTOR	UT
	L371	EQL4004-1R0	INDUCTOR	
	L955	ENZ8101-007	INDUCTOR	BS
	L955	ENZ8101-007	INDUCTOR	EF
	L955	ENZ8101-007	INDUCTOR	EN
	L955	ENZ8101-007	INDUCTOR	G
	L955	ENZ8101-007	INDUCTOR	U
	L955	ENZ8101-007	INDUCTOR	US
	L955	ENZ8101-007	INDUCTOR	UT
	L956	ENZ8101-007	INDUCTOR	BS
	L956	ENZ8101-007	INDUCTOR	EF
	L956	ENZ8101-007	INDUCTOR	EN
	L956	ENZ8101-007	INDUCTOR	U
	L956	ENZ8101-007	INDUCTOR	US
	L956	ENZ8101-007	INDUCTOR	UT
	P271	EMV7123-029	MALE CONNEC (29PIN)	
	P272	EMV7123-029R	PIN CONNECT (29PIN)	
	P351	EMV7122-103	CONNECT TER	

⚠ : SAFETY PARTS

OTHERS

⚠	ITEM	PART NUMBER	DESCRIPTION	AREA
	S251	ESP0001-023M	TACT SWITCH (DISC)	
	S252	ESP0001-023M	TACT SWITCH (1)	
	S253	ESP0001-023M	TACT SWITCH (2)	
	S254	ESP0001-023M	TACT SWITCH (3)	
	S255	ESP0001-023M	TACT SWITCH (PLAY/PAUSE)	
	S256	ESP0001-023M	TACT SWITCH (TARACK)	
	S257	ESP0001-023M	TACT SWITCH (4)	
	S258	ESP0001-023M	TACT SWITCH (5)	
	S259	ESP0001-023M	TACT SWITCH (6)	
	S260	ESP0001-023M	TACT SWITCH (STOP)	
	S261	ESP0001-023M	TACT SWITCH (0)	
	S262	ESP0001-023M	TACT SWITCH (7)	
	S263	ESP0001-023M	TACT SWITCH (8)	
	S264	ESP0001-023M	TACT SWITCH (9)	
	S268	ESP0001-023M	TACT SWITCH (POWER ON STANDBY)	BS
	S268	ESP0001-023M	TACT SWITCH (POWER ON STANDBY)	EF
	S268	ESP0001-023M	TACT SWITCH (POWER ON STANDBY)	EN
	S268	ESP0001-023M	TACT SWITCH (POWER ON STANDBY)	G
	S268	ESP0001-023M	TACT SWITCH (POWER ON STANDBY)	U
	S268	ESP0001-023M	TACT SWITCH (POWER ON STANDBY)	US
	S268	ESP0001-023M	TACT SWITCH (POWER ON STANDBY)	UT
	S271	ESP0001-023M	TACT SWITCH (DISC SKIP ⏭)	
	S272	ESP0001-023M	TACT SWITCH (DISC SKIP ⏮)	
	S273	ESP0001-023M	TACT SWITCH (TRACK ⏭)	
	S274	ESP0001-023M	TACT SWITCH (TRACK ⏮)	
	S283	ESP0001-023M	TACT SWITCH (USER FILE)	BS
	S283	ESP0001-023M	TACT SWITCH (USER FILE)	EF
	S283	ESP0001-023M	TACT SWITCH (USER FILE)	EN
	S283	ESP0001-023M	TACT SWITCH (USER FILE)	G
	S283	ESP0001-023M	TACT SWITCH (USER FILE)	U
	S283	ESP0001-023M	TACT SWITCH (USER FILE)	US
	S283	ESP0001-023M	TACT SWITCH (USER FILE)	UT
	S284	ESP0001-023M	TACT SWITCH (PROGRAM)	BS
	S284	ESP0001-023M	TACT SWITCH (PROGRAM)	EF
	S284	ESP0001-023M	TACT SWITCH (PROGRAM)	EN
	S284	ESP0001-023M	TACT SWITCH (PROGRAM)	G
	S284	ESP0001-023M	TACT SWITCH (PROGRAM)	U
	S284	ESP0001-023M	TACT SWITCH (PROGRAM)	US
	S284	ESP0001-023M	TACT SWITCH (PROGRAM)	UT
	S285	ESP0001-023M	TACT SWITCH (DEL.FILE)	BS
	S285	ESP0001-023M	TACT SWITCH (DEL.FILE)	EF
	S285	ESP0001-023M	TACT SWITCH (DEL.FILE)	EN
	S285	ESP0001-023M	TACT SWITCH (DEL.FILE)	G
	S285	ESP0001-023M	TACT SWITCH (DEL.FILE)	U
	S285	ESP0001-023M	TACT SWITCH (DEL.FILE)	US
	S285	ESP0001-023M	TACT SWITCH (DEL.FILE)	UT
	S286	ESP0001-023M	TACT SWITCH (REPEAT)	BS
	S286	ESP0001-023M	TACT SWITCH (REPEAT)	EF
	S286	ESP0001-023M	TACT SWITCH (REPEAT)	EN
	S286	ESP0001-023M	TACT SWITCH (REPEAT)	G
	S286	ESP0001-023M	TACT SWITCH (REPEAT)	U
	S286	ESP0001-023M	TACT SWITCH (REPEAT)	US
	S286	ESP0001-023M	TACT SWITCH (REPEAT)	UT
	S287	ESP0001-023M	TACT SWITCH (MEMORY)	BS
	S287	ESP0001-023M	TACT SWITCH (MEMORY)	EF
	S287	ESP0001-023M	TACT SWITCH (MEMORY)	EN
	S287	ESP0001-023M	TACT SWITCH (MEMORY)	G
	S287	ESP0001-023M	TACT SWITCH (MEMORY)	U
	S287	ESP0001-023M	TACT SWITCH (MEMORY)	US
	S287	ESP0001-023M	TACT SWITCH (MEMORY)	UT
	S288	ESP0001-023M	TACT SWITCH (CALL)	BS
	S288	ESP0001-023M	TACT SWITCH (CALL)	EF
	S288	ESP0001-023M	TACT SWITCH (CALL)	EN
	S288	ESP0001-023M	TACT SWITCH (CALL)	G
	S288	ESP0001-023M	TACT SWITCH (CALL)	U
	S288	ESP0001-023M	TACT SWITCH (CALL)	US
	S288	ESP0001-023M	TACT SWITCH (CALL)	UT
	S289	ESP0001-023M	TACT SWITCH (RANDOM)	BS
	S289	ESP0001-023M	TACT SWITCH (RANDOM)	EF
	S289	ESP0001-023M	TACT SWITCH (RANDOM)	EN
	S289	ESP0001-023M	TACT SWITCH (RANDOM)	G
	S289	ESP0001-023M	TACT SWITCH (RANDOM)	U
	S289	ESP0001-023M	TACT SWITCH (RANDOM)	US
	S289	ESP0001-023M	TACT SWITCH (RANDOM)	UT
	S290	ESP0001-023M	TACT SWITCH (CANCEL)	BS
	S290	ESP0001-023M	TACT SWITCH (CANCEL)	EF
	S290	ESP0001-023M	TACT SWITCH (CANCEL)	EN
	S290	ESP0001-023M	TACT SWITCH (CANCEL)	G
	S290	ESP0001-023M	TACT SWITCH (CANCEL)	U
	S290	ESP0001-023M	TACT SWITCH (CANCEL)	US
	S290	ESP0001-023M	TACT SWITCH (CANCEL)	UT
	S901	QSS1L22-E01	SLIDE SWITC	U
	S901	QSS1L22-E01	SLIDE SWITC	UT
	X251	ECX0006-144KNTJ	CRYSTAL	BS
	X251	ECX0006-144KNTJ	CRYSTAL	EF
	X251	ECX0006-144KNTJ	CRYSTAL	EN
	X251	ECX0006-144KNTJ	CRYSTAL	G
	X251	ECX0006-144KNTJ	CRYSTAL	U
	X251	ECX0006-144KNTJ	CRYSTAL	US
	X251	ECX0006-144KNTJ	CRYSTAL	UT

⚠ : SAFETY PARTS

OTHERS

⚠	ITEM	PART NUMBER	DESCRIPTION	AREA
	X301	ECX0169-344ENAT	CRYSTAL	
⚠	CP901	ICP-N15	I.C.PROTECT	BS
⚠	CP901	ICP-N15	I.C.PROTECT	EF
⚠	CP901	ICP-N15	I.C.PROTECT	EN
⚠	CP901	ICP-N15	I.C.PROTECT	G
⚠	CP901	ICP-N15	I.C.PROTECT	U
⚠	CP901	ICP-N15	I.C.PROTECT	US
⚠	CP901	ICP-N15	I.C.PROTECT	UT
	EP951	EMZ4002-001Z	EARTH PLATE	BS
	EP951	EMZ4002-001Z	EARTH PLATE	EF
	EP951	EMZ4002-001Z	EARTH PLATE	EN
	EP951	EMZ4002-001Z	EARTH PLATE	G
	EP951	EMZ4002-001Z	EARTH PLATE	U
	EP951	EMZ4002-001Z	EARTH PLATE	US
	EP951	EMZ4002-001Z	EARTH PLATE	UT
	EP955	EMZ4002-001Z	EARTH PLATE	BS
	EP955	EMZ4002-001Z	EARTH PLATE	EF
	EP955	EMZ4002-001Z	EARTH PLATE	EN
	EP955	EMZ4002-001Z	EARTH PLATE	G
	EP955	EMZ4002-001Z	EARTH PLATE	U
	EP955	EMZ4002-001Z	EARTH PLATE	US
	EP955	EMZ4002-001Z	EARTH PLATE	UT
	EP956	EMZ4002-001Z	EARTH PLATE	BS
	EP956	EMZ4002-001Z	EARTH PLATE	EF
	EP956	EMZ4002-001Z	EARTH PLATE	EN
	EP956	EMZ4002-001Z	EARTH PLATE	G
	EP956	EMZ4002-001Z	EARTH PLATE	U
	EP956	EMZ4002-001Z	EARTH PLATE	US
	EP956	EMZ4002-001Z	EARTH PLATE	UT
	FL251	ELU0001-162	FLUORESCENT	
	FW351	EWR33B-25LST	FLAT WIRE A(3PIN)	
	FW901	EWR36B-25LST	FLAT WIRE A(6PIN)	BS
	FW901	EWR36B-25LST	FLAT WIRE A(6PIN)	EF
	FW901	EWR36B-25LST	FLAT WIRE A(6PIN)	EN
	FW901	EWR36B-25LST	FLAT WIRE A(6PIN)	G
	FW901	EWR36B-25LST	FLAT WIRE A(6PIN)	U
	FW901	EWR36B-25LST	FLAT WIRE A(6PIN)	US
	FW901	EWR36B-25LST	FLAT WIRE A(6PIN)	UT
	FW911	EWR35B-25SST	FLAT WIRE A(5PIN)	BS
	FW911	EWR35B-25SST	FLAT WIRE A(5PIN)	EF
	FW911	EWR35B-25SST	FLAT WIRE A(5PIN)	EN
	FW911	EWR35B-25SST	FLAT WIRE A(5PIN)	G
	FW911	EWR35B-25SST	FLAT WIRE A(5PIN)	U
	FW911	EWR35B-25SST	FLAT WIRE A(5PIN)	US
	FW911	EWR35B-25SST	FLAT WIRE A(5PIN)	UT
	FW912	EWR34B-25SST	FLAT WIRE A(4PIN)	BS
	FW912	EWR34B-25SST	FLAT WIRE A(4PIN)	EF
	FW912	EWR34B-25SST	FLAT WIRE A(4PIN)	EN
	FW912	EWR34B-25SST	FLAT WIRE A(4PIN)	G
	FW912	EWR34B-25SST	FLAT WIRE A(4PIN)	U
	FW912	EWR34B-25SST	FLAT WIRE A(4PIN)	US
	FW912	EWR34B-25SST	FLAT WIRE A(4PIN)	UT
	FW913	EWR36B-20LST	FLAT WIRE A(6PIN)	BS
	FW913	EWR36B-20LST	FLAT WIRE A(6PIN)	EF
	FW913	EWR36B-20LST	FLAT WIRE A(6PIN)	EN
	FW913	EWR36B-20LST	FLAT WIRE A(6PIN)	G
	FW913	EWR36B-20LST	FLAT WIRE A(6PIN)	U
	FW913	EWR36B-20LST	FLAT WIRE A(6PIN)	US
	FW913	EWR36B-20LST	FLAT WIRE A(6PIN)	UT
	FW914	EWR37B-16LST	FLAT WIRE A(7PIN)	
	JT901	EMV7122-103	CONNECT TER(3PIN)	
	JT902	EMV7122-103	CONNECT TER(3PIN)	
	JT913	EMV7122-103	CONNECT TER(3PIN)	
	JT914	EMV7122-103	CONNECT TER(3PIN)	
	JT915	EMV7122-103	CONNECT TER(3PIN)	
	JT916	EMV7122-004	CONNECT TER(4PIN)	

⚠ : SAFETY PARTS

Packing Materials and Part Numbers
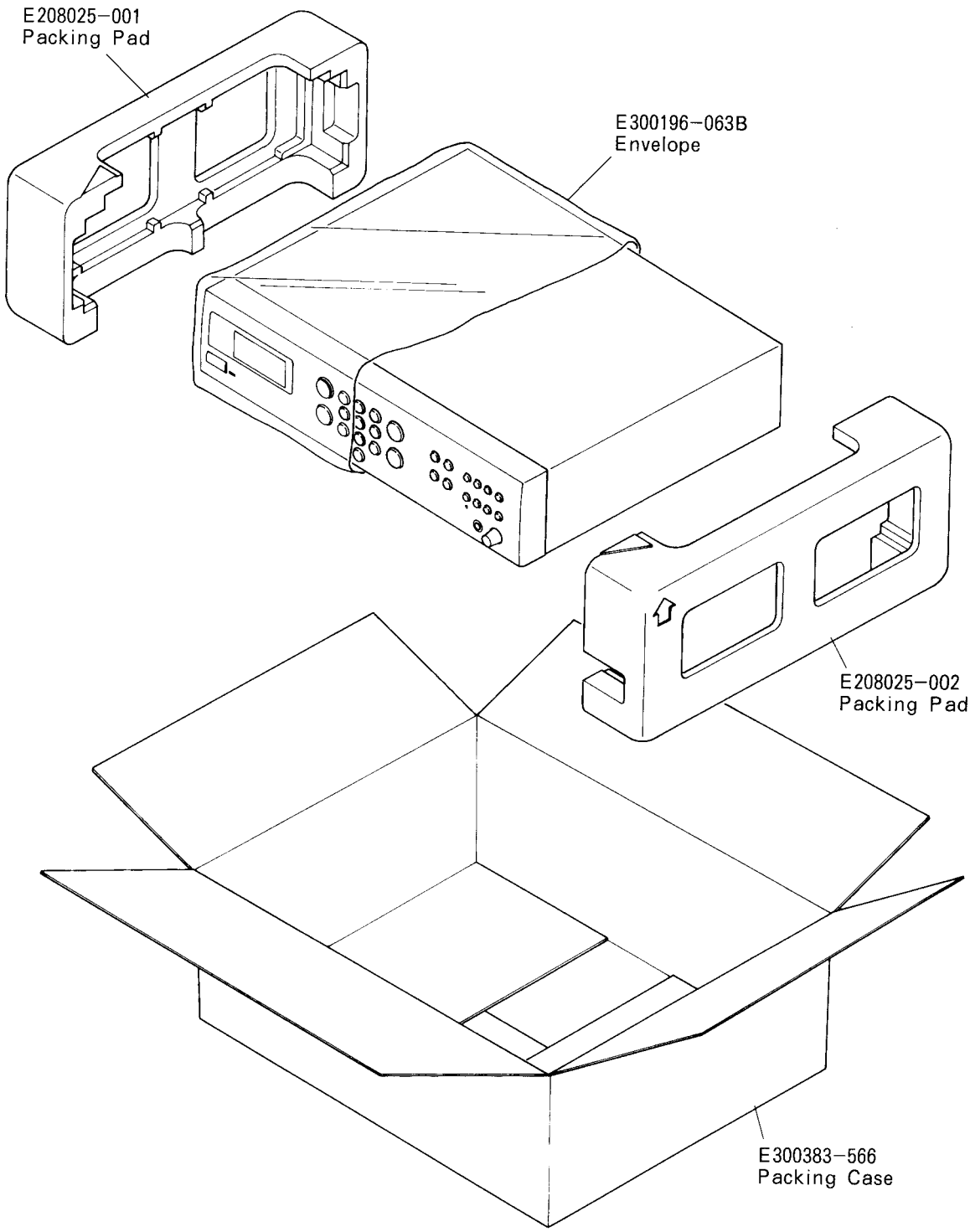
Symbol No. M 7 M M